B1-B1

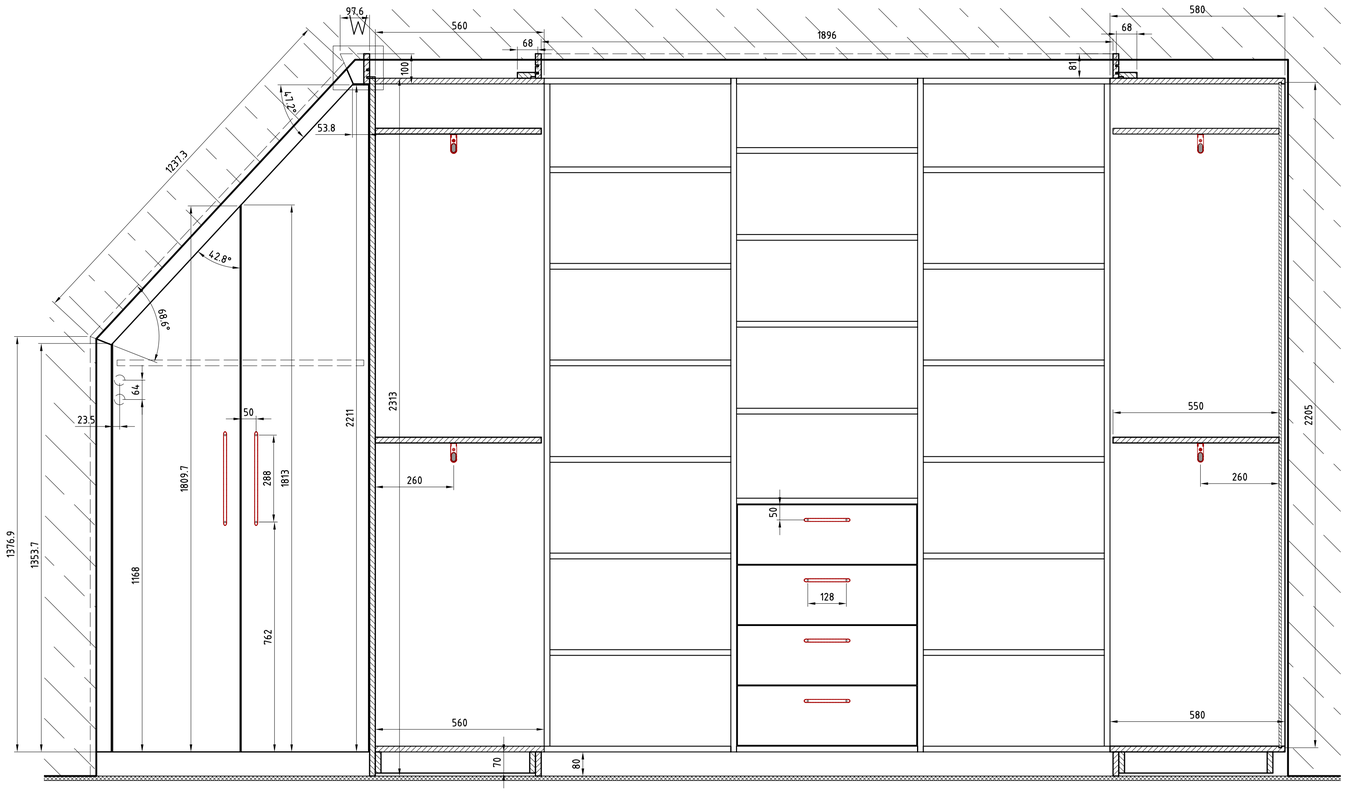

B (1:20)

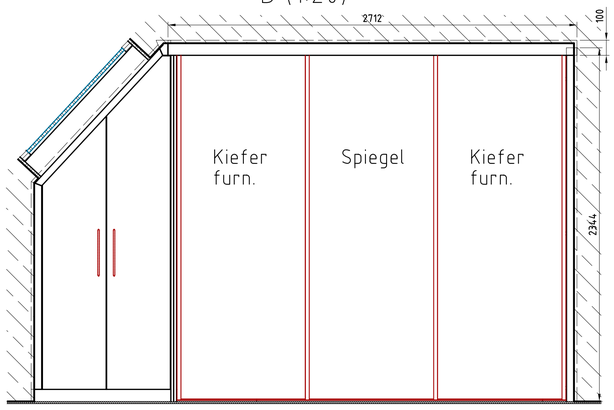

Rw

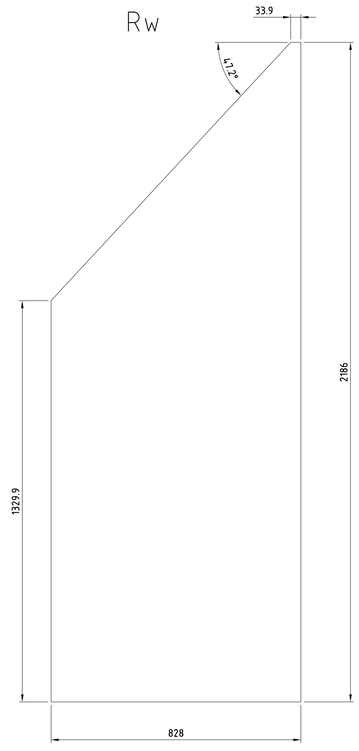

Sockel

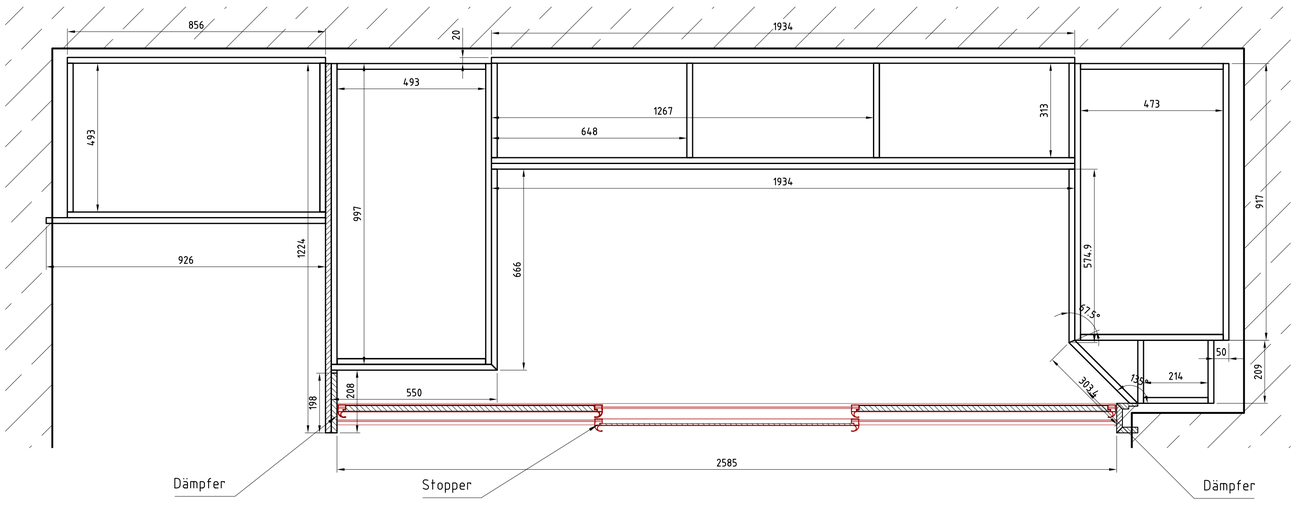

W (1:1)

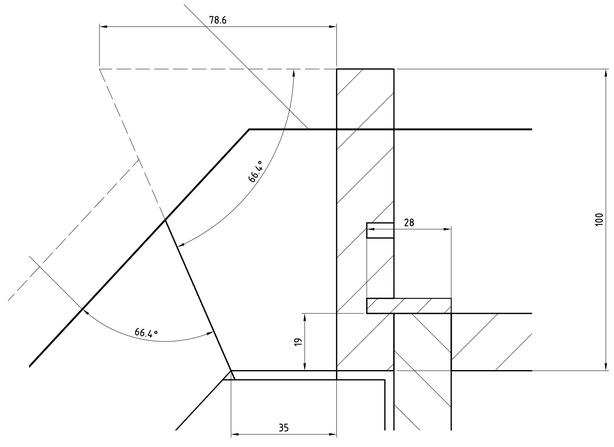
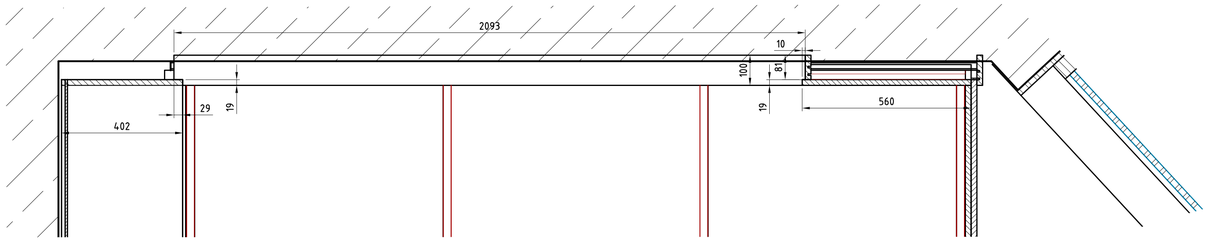
E-E