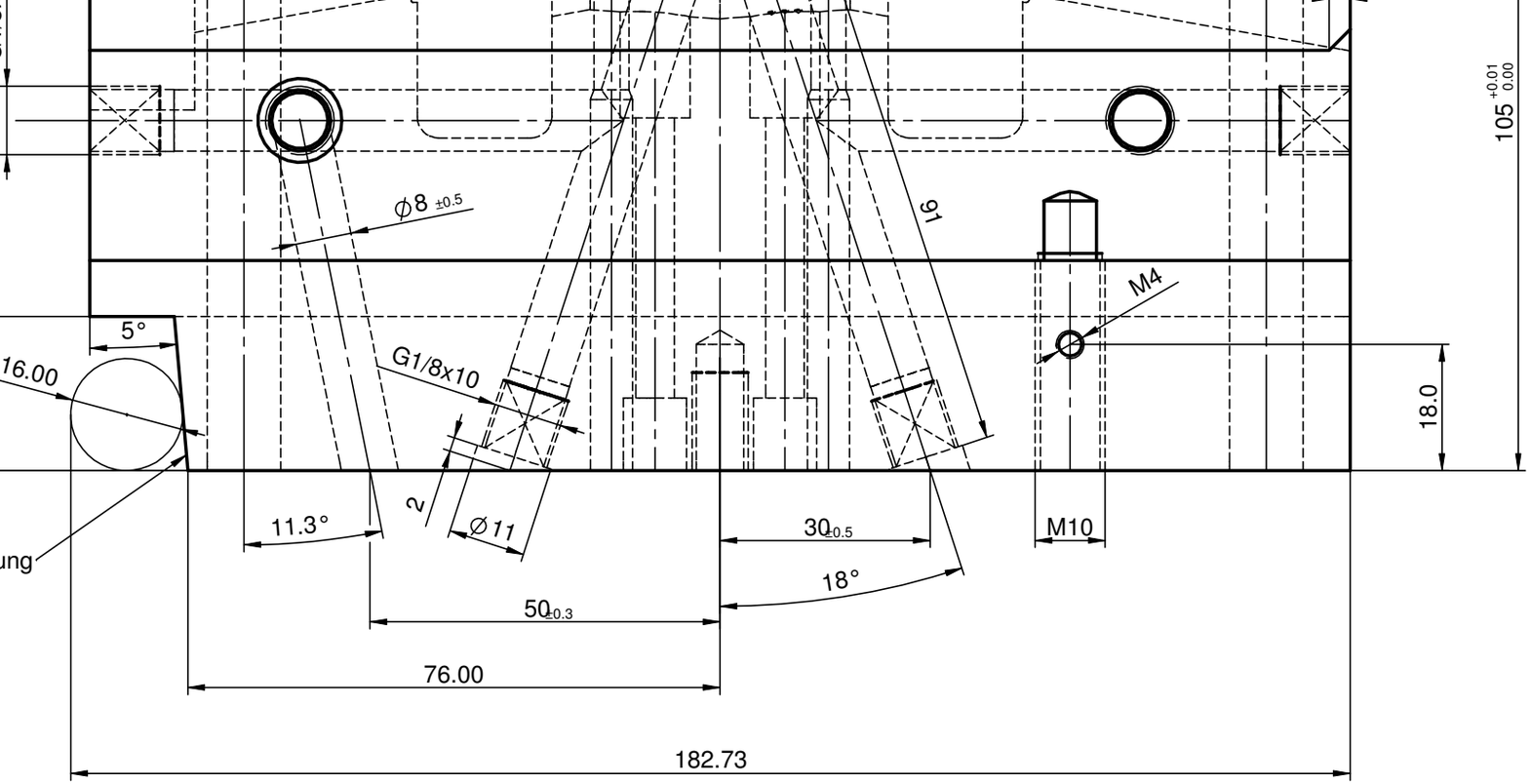
105 +0.01 0.00
Ø8 ±0.5
91
M4
5°
16.00
G1/8x10
18.0
2
Ø11
11.3°
30±0.5
M10
18°
50±0.3
76.00
182.73

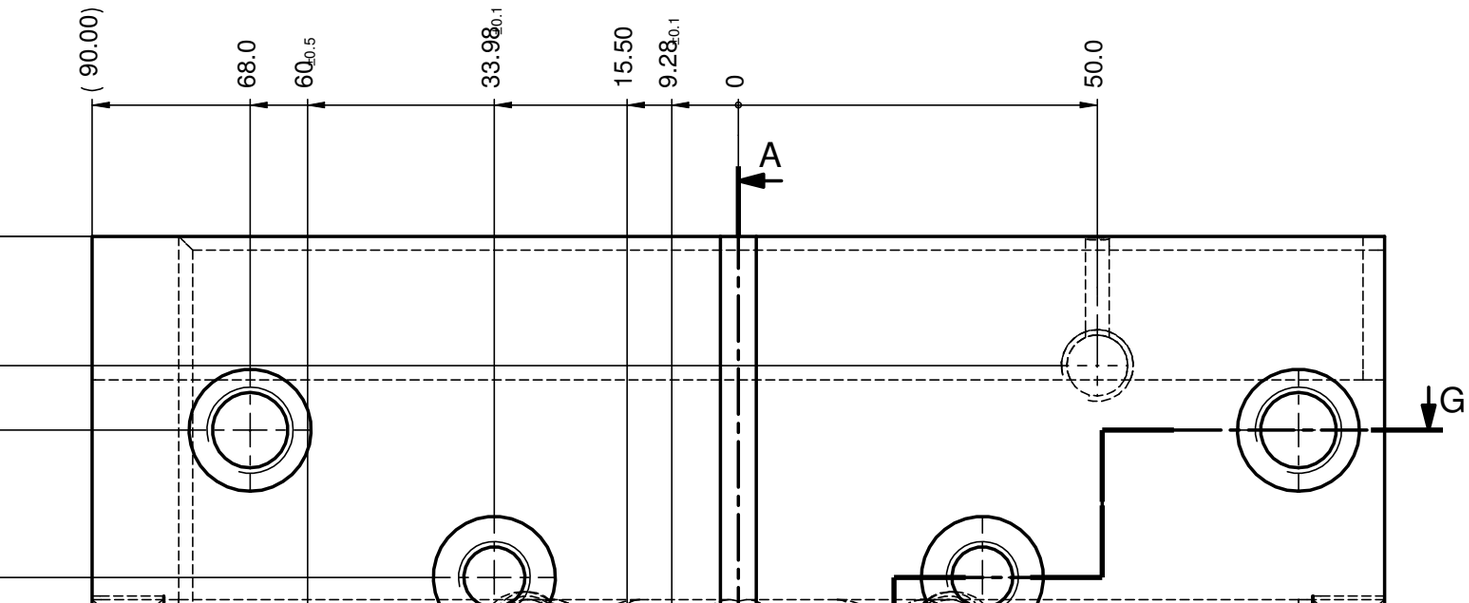
(90.00)
68.0
60±0.5
33.98±0.1
15.50
9.28±0.1
0
50.0
A
G

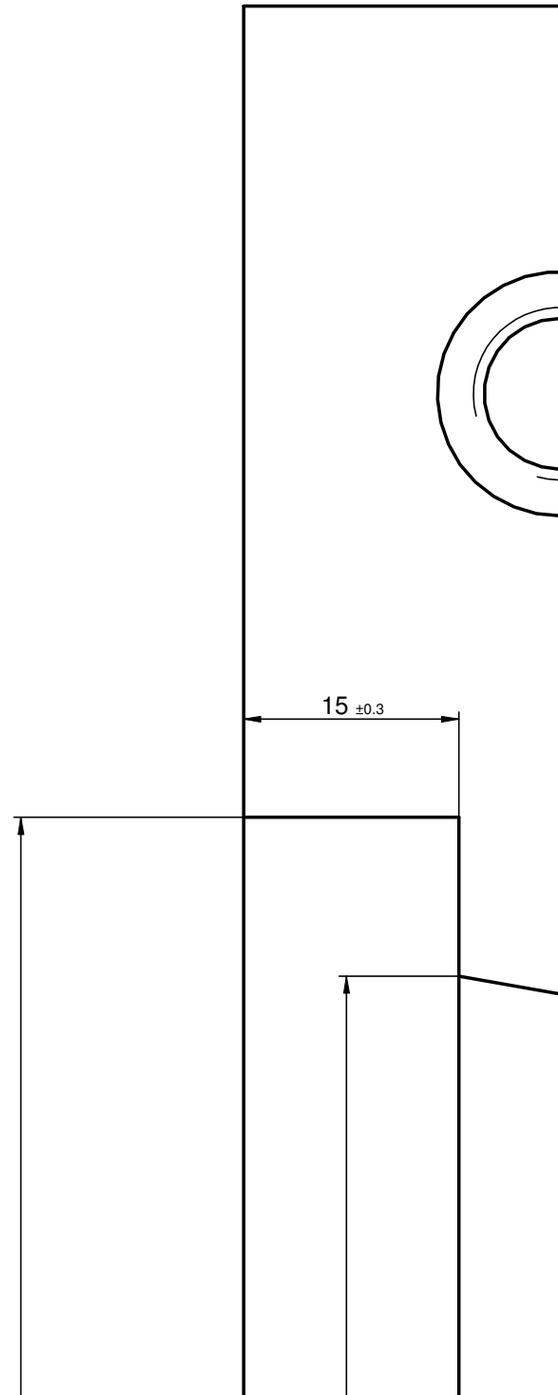
15 ±0.3