Berechnung Gabel:

Last: 1000 N

$$A = 0,45m^2 * 0,45m^2 = 0,2025m^2$$

Flächenlast: $\frac{1000N}{0,2025m^2} = 4938,3\frac{N}{m^2}$

Streckenlast: $4938,3\frac{N}{m^2} * 0,45m = 2222,2\frac{N}{m}$

Punktlast: $2222,2\frac{N}{m} * 0,45m = 1000N$

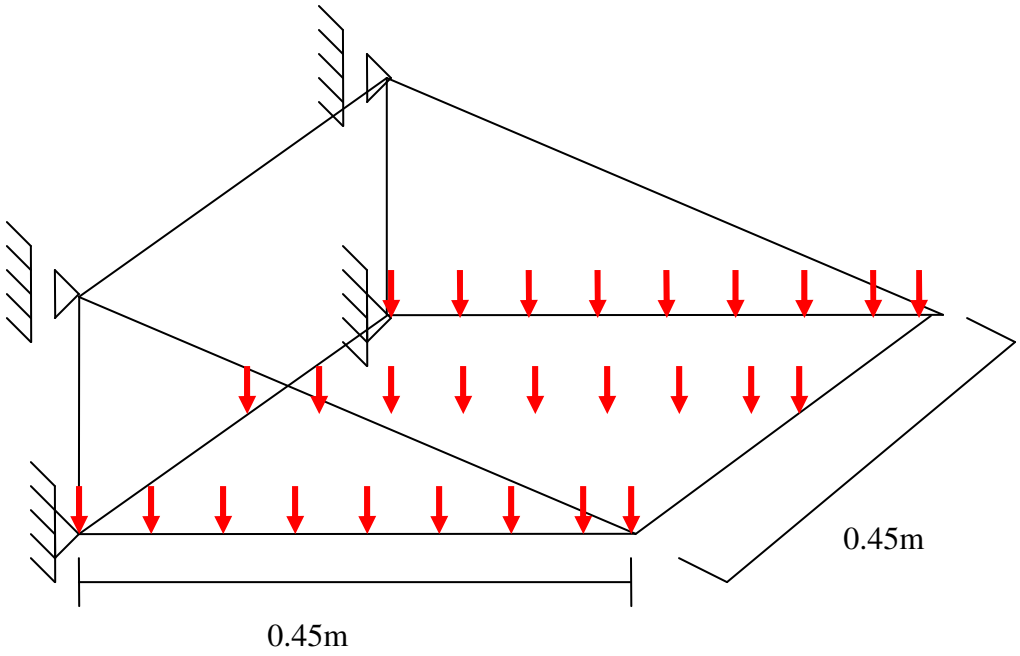

Berechnung der Lagerkraefte:

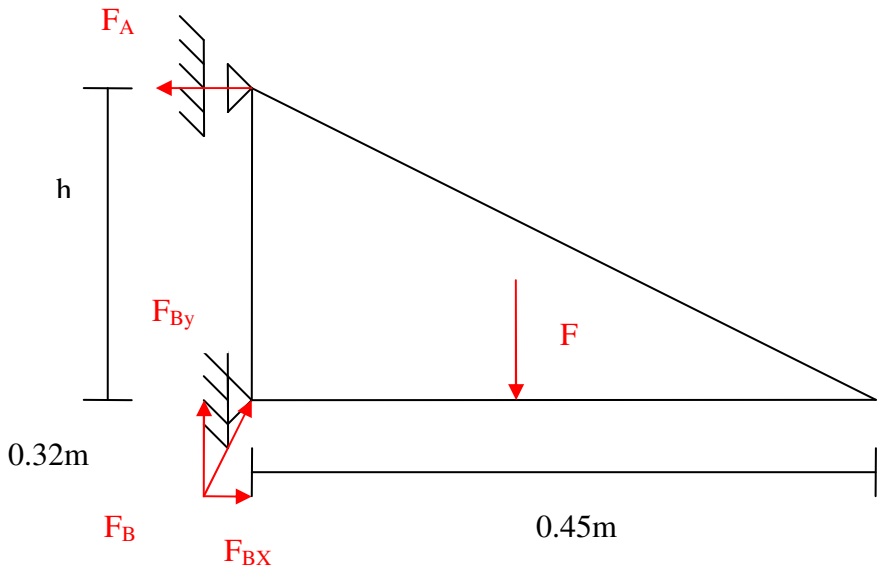

$$\sum M = 0 : F_A * h = F * \frac{l}{2}$$
$$\sum F_x = 0 : F_A = F_{BX}$$
$$\sum F_y = 0 : F = F_{BY}$$

$$F_A = \frac{F * \frac{l}{2}}{h} = \frac{500N * \frac{0,45m}{2}}{0.32m} = 351,6N$$
$$F_{BX} = F_A = 351,6N$$
$$F_{BY} = F = 500N$$
$$F_B = \sqrt{F_{BX}{}^2 + F_{BY}{}^2} = \sqrt{351,6N^2 + 500N^2} = 611,2N$$

Berechnung der Stabkrafte:

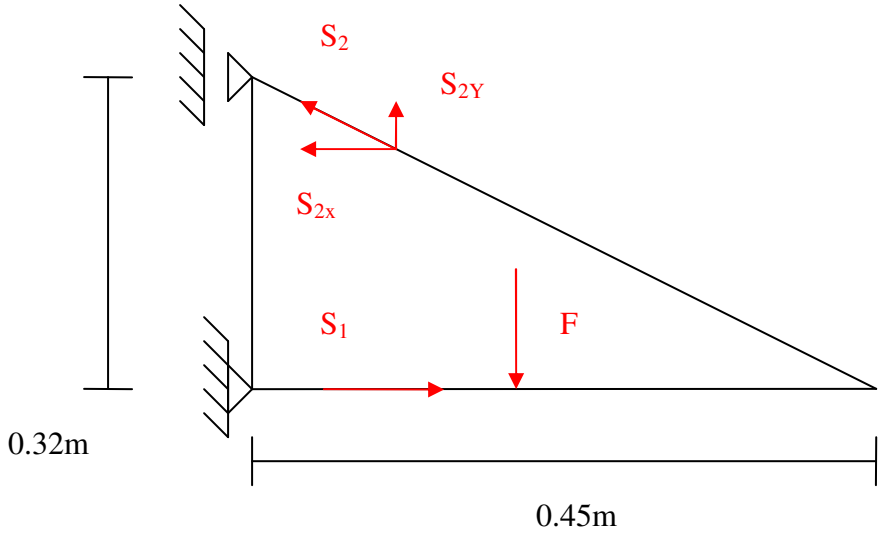

$$S_{2x} = S_2 * \cos(\alpha)$$
$$S_{2y} = S_2 * \sin(\alpha)$$
$$\tan(\alpha) = \frac{h}{l} = \frac{0,32m}{0,45m} \rightarrow \alpha = 35,4^\circ$$

$$\sum F_x = 0 : S_1 = S_2 * \cos(\alpha)$$
$$\sum F_y = 0 : F = S_2 * \sin(\alpha)$$

$$S_2 = \frac{F}{\sin(\alpha)} = \frac{500N}{\sin(35,4^\circ)} = 863,1N$$
$$S_1 = S_2 * \cos(\alpha) = 863,1N * \cos(35,4^\circ) = 703,6N$$