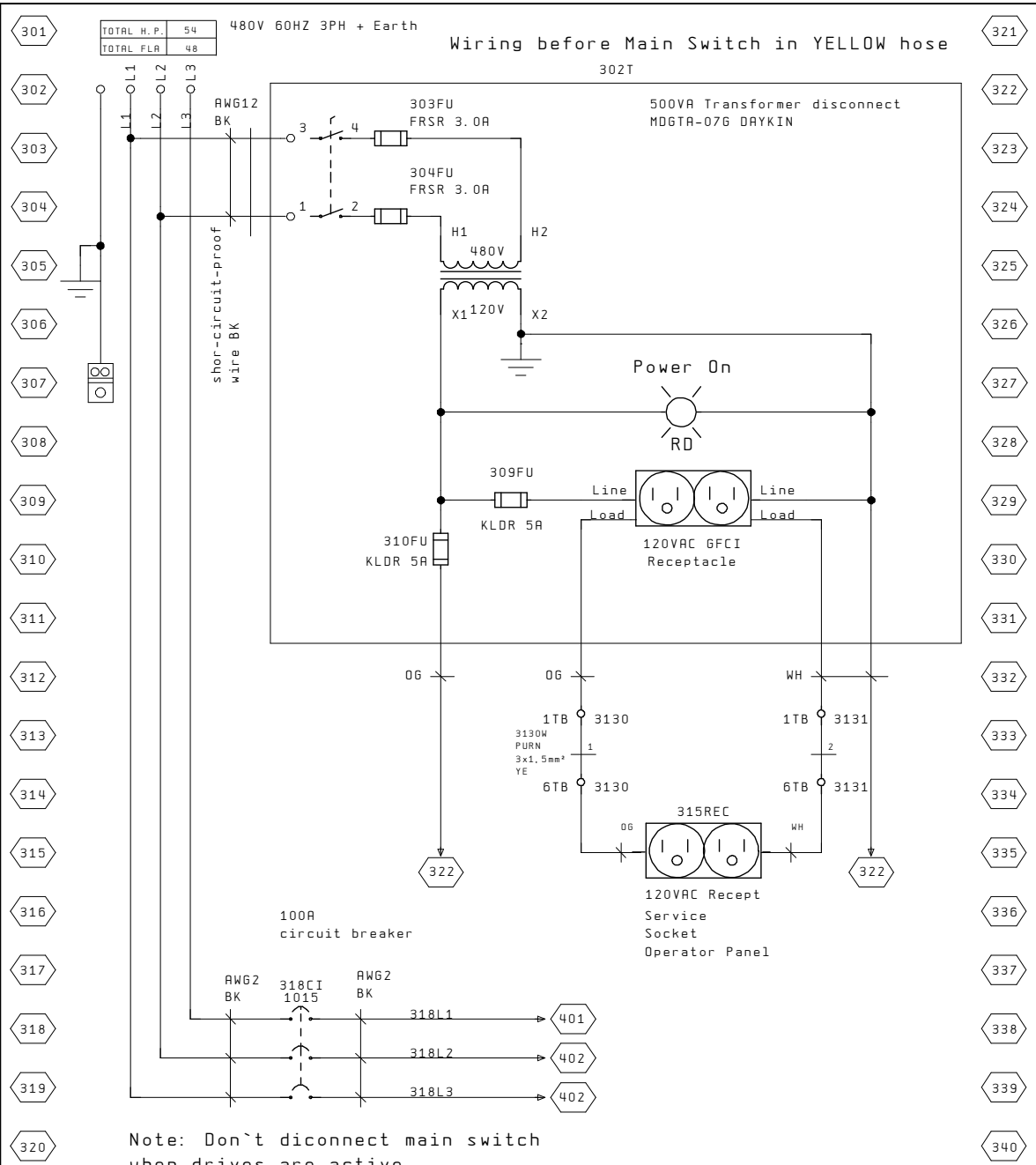

Note: Don`t diconnect main switch when drives are active.

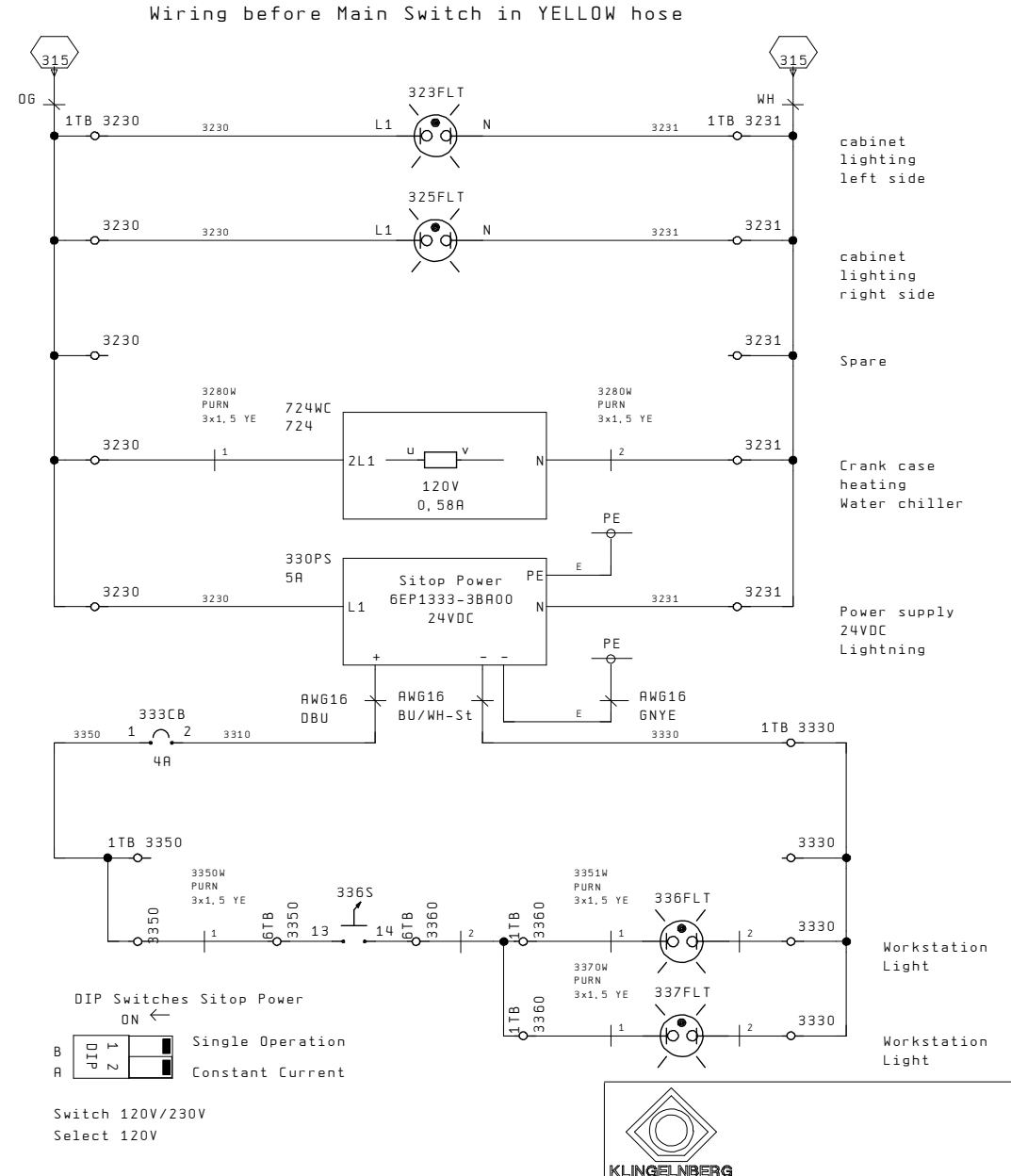

KLINGELNBERG

DRAWN BY	SCALE	DATE	CHECKED	MACHINE
NKU		16.08.07		

TITLE :
C27
Daykin circuit

PLANT NO.

DRAWING NO. 650.01.1014

SHEET NO. 3 OF 223

DATE	SYM.	REVISIONS	BY	CHKD