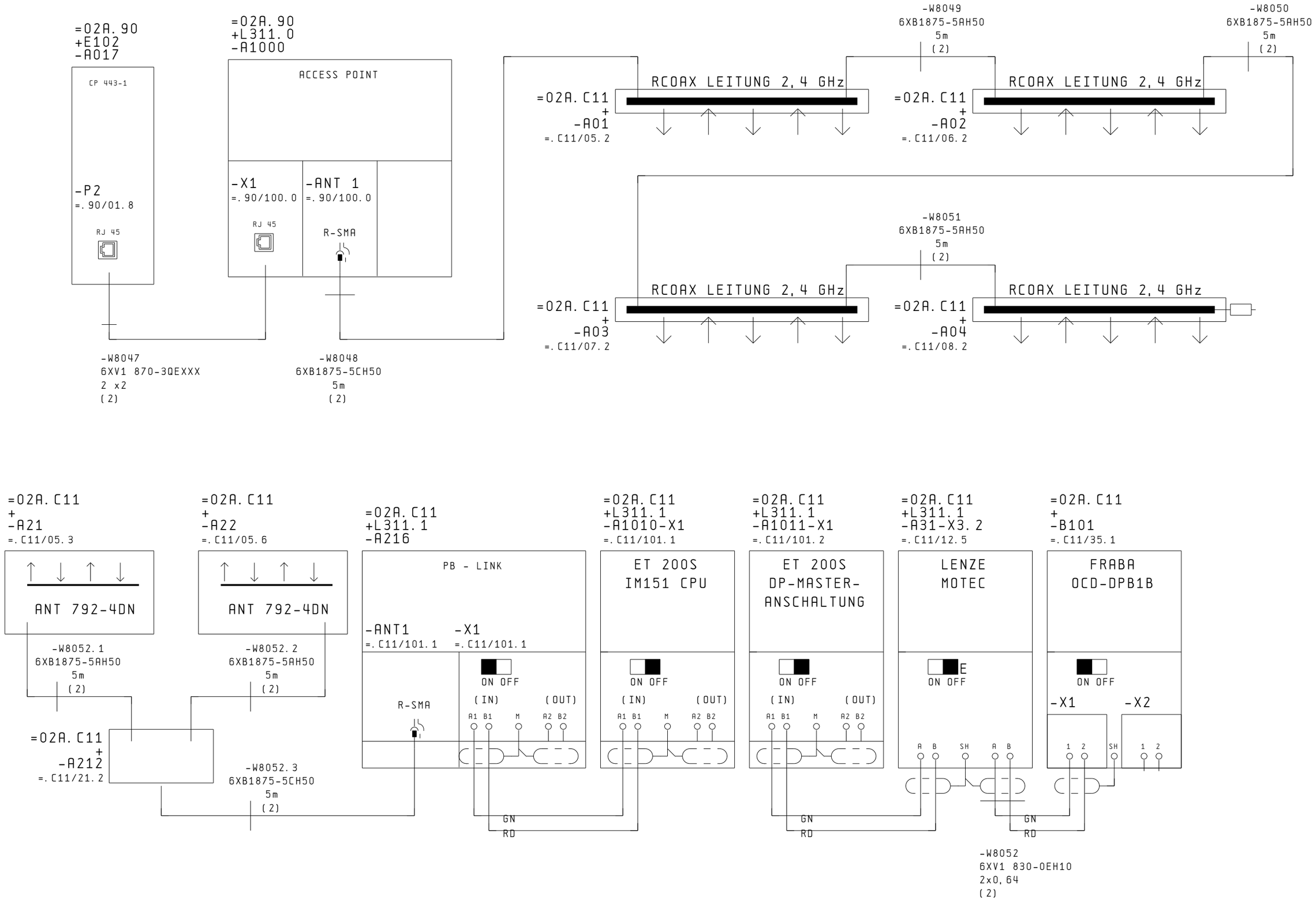
=02A.90
+E102
-A017
CP 443-1
-P2
=.90/01.8
RJ 45
=02A.90
+L311.0
-A1000
ACCESS POINT
-X1
=.90/100.0
RJ 45
-ANT 1
=.90/100.0
R-SMA
-W8047
6XV1 870-3QEXXX
2 x2
(2)
-W8048
6XB1875-5CH50
5m
(2)
-W8049
6XB1875-5AH50
5m
(2)
-W8050
6XB1875-5AH50
5m
(2)
RCOAX LEITUNG 2,4 GHz
=02A.C11
+
-A01
=.C11/05.2
RCOAX LEITUNG 2,4 GHz
=02A.C11
+
-A02
=.C11/06.2
-W8051
6XB1875-5AH50
5m
(2)
RCOAX LEITUNG 2,4 GHz
=02A.C11
+
-A03
=.C11/07.2
RCOAX LEITUNG 2,4 GHz
=02A.C11
+
-A04
=.C11/08.2
=02A.C11
+
-A21
=.C11/05.3
ANT 792-4DN
=02A.C11
+
-A22
=.C11/05.6
ANT 792-4DN
=02A.C11
+L311.1
-A216
PB - LINK
-ANT1
=.C11/101.1
-X1
=.C11/101.1
ON OFF
R-SMA
(IN)
(OUT)
A1 B1 M A2 B2
=02A.C11
+L311.1
-A1010-X1
=.C11/101.1
ET 200S
IM151 CPU
ON OFF
(IN)
(OUT)
A1 B1 M A2 B2
=02A.C11
+L311.1
-A1011-X1
=.C11/101.2
ET 200S
DP-MASTER-
ANSCHALTUNG
ON OFF
(IN)
(OUT)
A1 B1 M A2 B2
=02A.C11
+L311.1
-A31-X3.2
=.C11/12.5
LENZE
MOTEC
E
ON OFF
A B SH A B
=02A.C11
+
-B101
=.C11/35.1
FRABA
OCD-DPB1B
ON OFF
-X1
-X2
1 2 SH 1 2
-W8052.1
6XB1875-5AH50
5m
(2)
-W8052.2
6XB1875-5AH50
5m
(2)
=02A.C11
+
-A212
=.C11/21.2
-W8052.3
6XB1875-5CH50
5m
(2)
GN
RD
GN
RD
GN
RD
-W8052
6XV1 830-0EH10
2x0,64
(2)