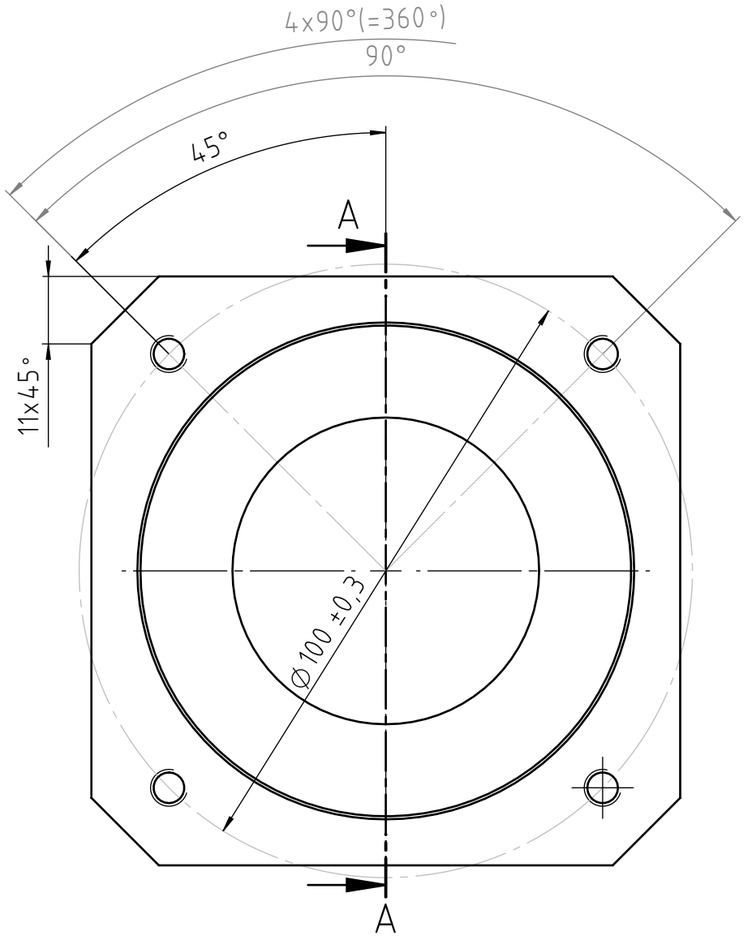

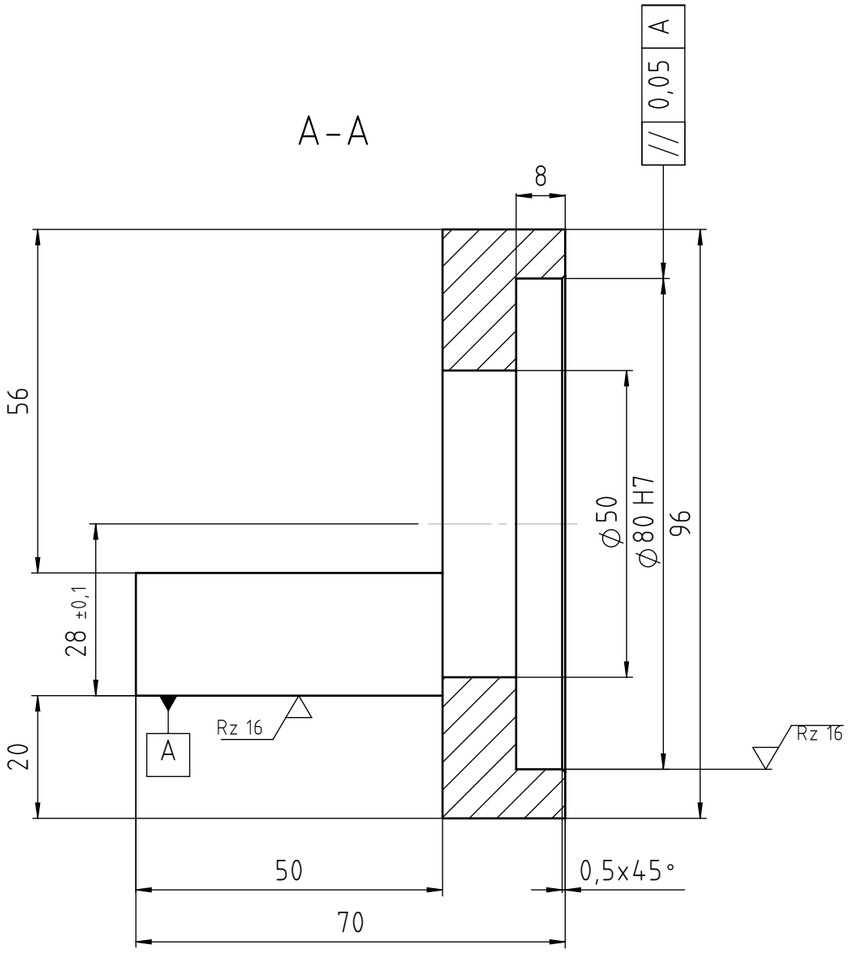

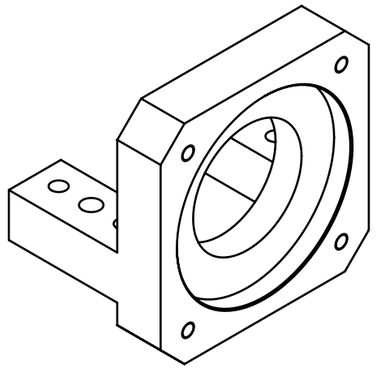

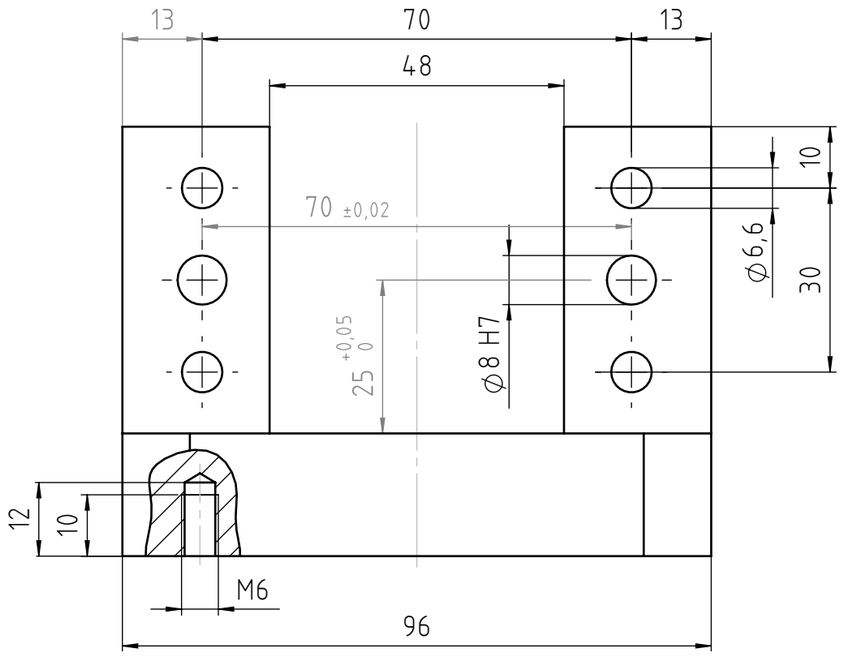

Rz 63 (Rz 16)

GE
Inspection Technologies