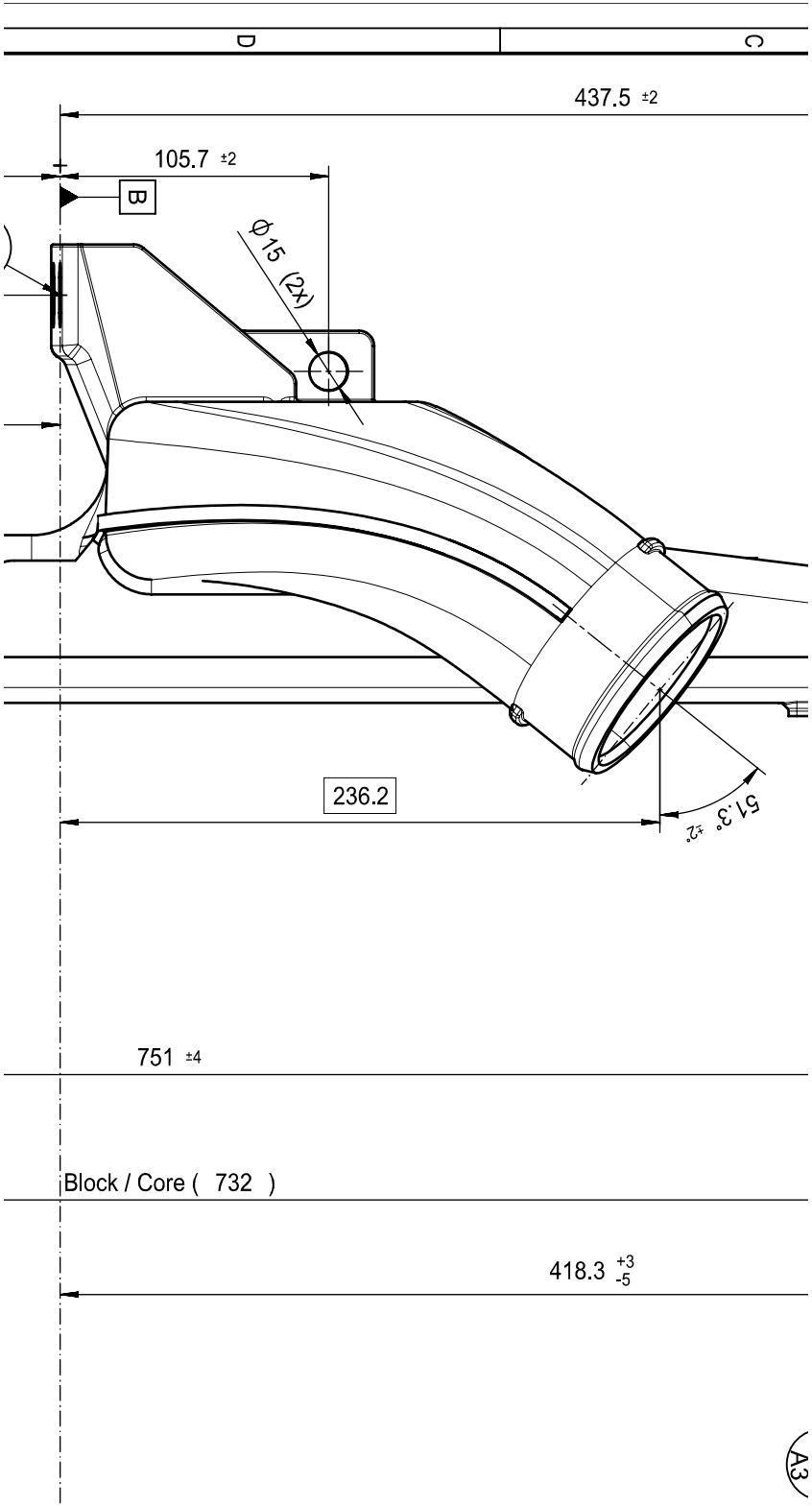
D
C
437.5 ±2
105.7 ±2
B
Ø15 (2x)
236.2
51.3° ±2°
751 ±4
Block / Core (732)
418.3 +3 -5
A3