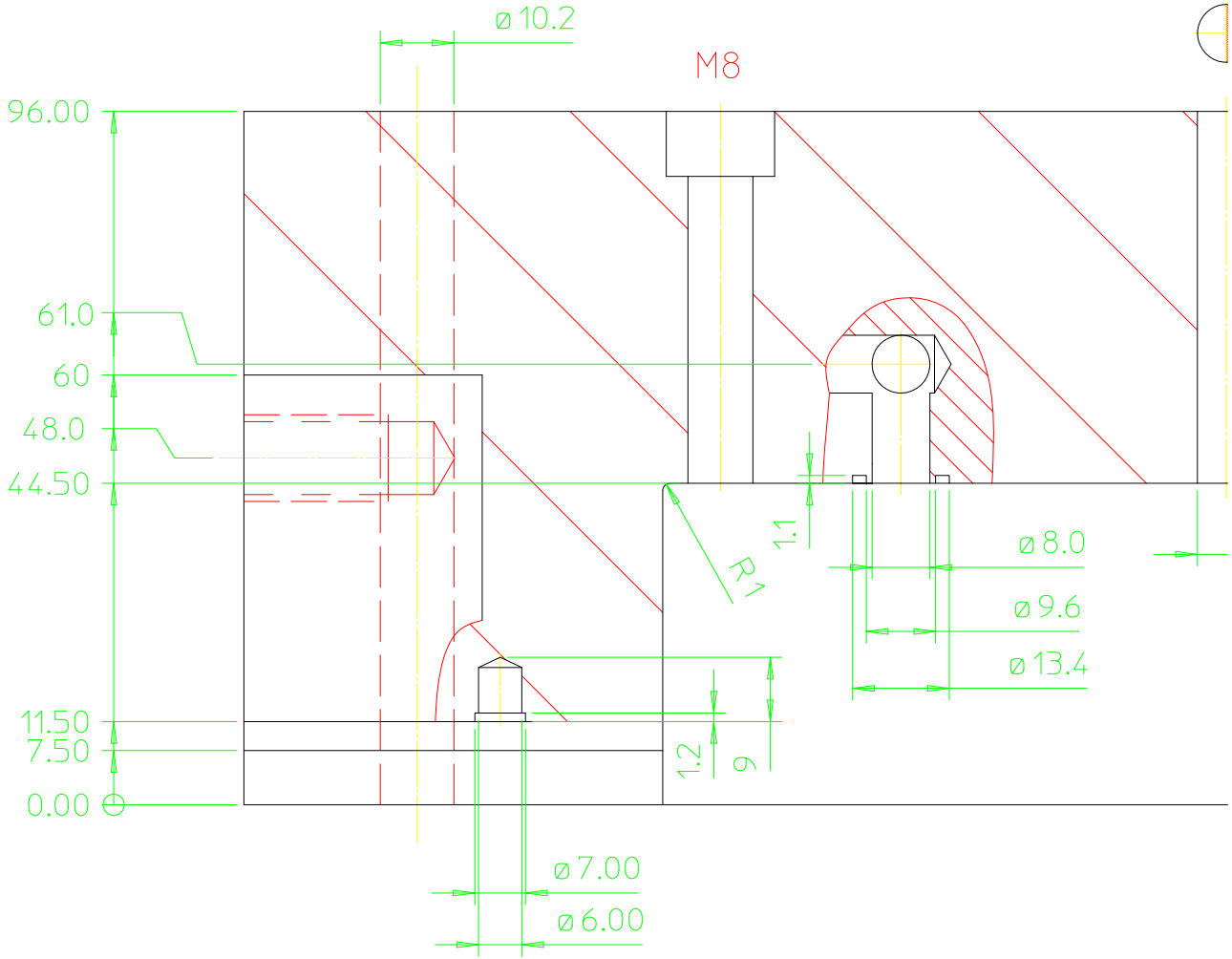
ø10.2
M8
96.00
61.0
60
48.0
44.50
11.50
7.50
0.00
R1
1.1
ø8.0
ø9.6
ø13.4
1.2
9
ø7.00
ø6.00