SolidWorks File Edit View Insert Tools Window Help SolidplusManager

Bill of Materials

Table Position

Stationary corner

Attach to anchor point

BOM Type

- Top-level only
- Parts only
- Indented

Configurations

- Default
- Lightweight
- DefaultDrawing

Part Configuration Grouping

Item Numbers

Start at: 1

Increment: 1

Follow assembly order

Do not change item numbers

Border

0.18mm

0.18mm

Layer

-None-

Copyright remains by Glatz AG, CH-8500 Frauenfeld

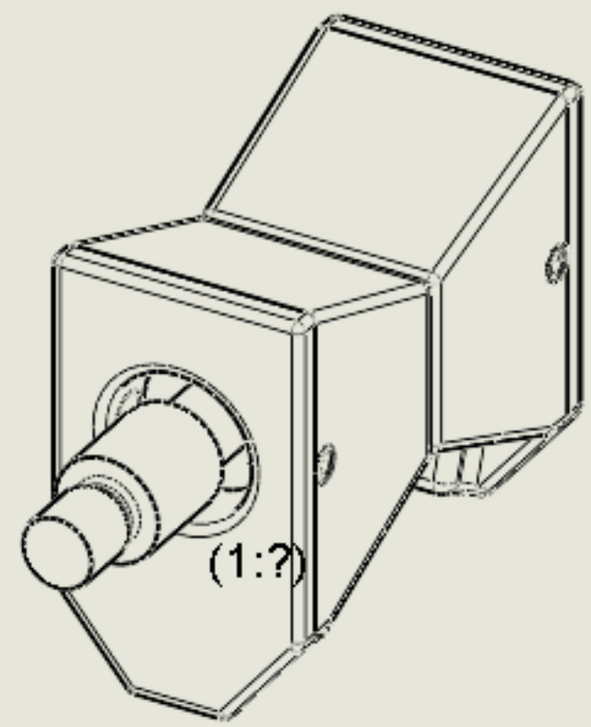

0.5mm

	A	B	C	D	E	F	G	H
1	Pos.	Qty.	Part Number		Description	Dimension	Material	Standard
2	1	2	370 03 742338		Stift (Spann)	Ø4x8	A2	BN337, ISO8752
3	2	2	014 02 200300	E	Klemmteil	29x48.5x28	AW-6060	
4	3	2	370 03 714035		U-Scheibe	M8/Ø8.4/Ø16x1.6	A2	BN670, DIN125A
5	4	1	014 02 210500		Mutter 6-Kt.	M8x2.5P1.25/SW13x14	2.0401	
6	5	1	000 00 000000-00		Musterteil für neue Vorlage wenn	M8/M8x2.5P1.25-LH/Ø12x23	1.4305	
7	6	1	014 02 210300		Gewindespindel	M8x2.5P1.25/-LH/Ø10x70	1.4305	
8	7	1	014 02 210400		Mutter 6-Kt.	M8x2.5P1.25-LH/SW13x14	2.0401	

Designed		Dimension	0.175kg	1:1
Revised		Material		
Approved				