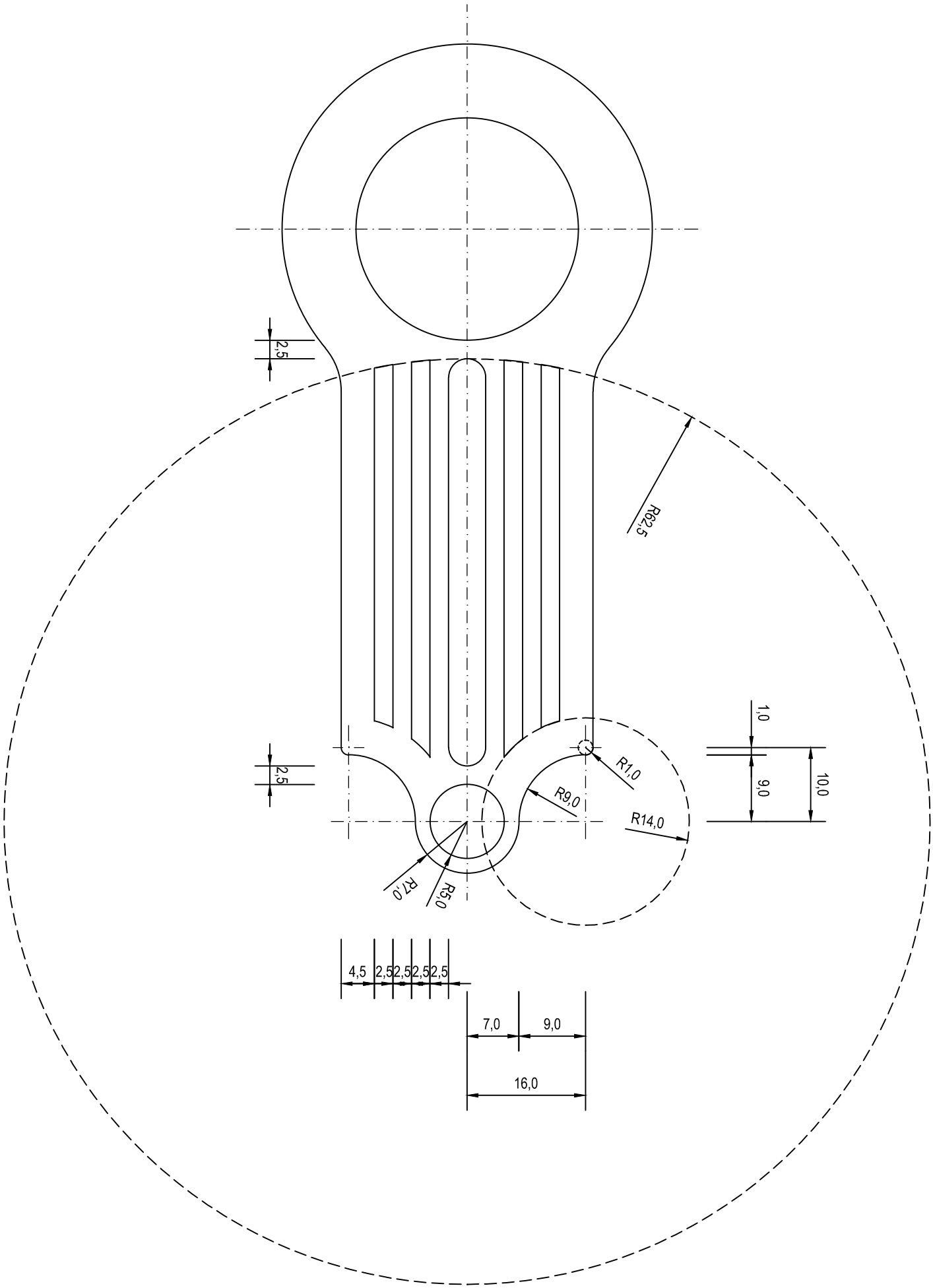
2,5
R62,5
1,0
2,5
R1,0
R9,0
R14,0
9,0
10,0
R7,0
R5,0
4,5
2,5
2,5
2,5
2,5
7,0
9,0
16,0