©Copyright 2005 ABB. All rights reserved. We reserve all rights in this document and in the information contained therein. Reproduction, use or disclosure to third parties without express authority is strictly forbidden.

rev. rev.	date fecha	creator creador
0	2010-01-12	RePao

Processindustries Printing
Segelhof 9P
CH-5405 Baden-Dättwil

customer:.
cliente

installation: XYZ Project ID
maquinaria

number: ABB: A-20#####
número OEM: ___

equipment: system
equipo sistema
circuit diagram
esquema eléctrico

number of pages : 86
número de páginas

Notre maison conserve en tout temps le droit de propriété sur ces dessins et annexes, confiés personnellement au destinataire. Ils ne doivent pas, sans notre autorisation écrite, être copiés, reproduits, communiqués à des tiers ou mis à leur disposition.
© Copyright 2005 ABB. All rights reserved.

We reserve all rights in this document and in the information contained therein. Reproduction, use or disclosure to third parties without express authority is strictly forbidden.
© Copyright 2005 ABB. All rights reserved.

Fuer dieses Dokument und den darin dargestellten Gegenstand behalten wir uns alle Rechte vor. Vervielfaeltigung, Bekanntgabe an Dritte oder Verwertung seines Inhalts sind ohne unsere ausdrueckliche Zustimmung verboten.
© Copyright 2005 ABB. All rights reserved.

page pagina	title 1 título 1	title 2 título 2	title 3 título 3	installation maquinaria	location lugar de instal.	rev. rev.
1	cover sheet hoja de cubierta	circuit diagram esquemas eléctricos		=PU___	+ALL	D
2	list of contents índice	circuit diagram esquemas eléctricos		=PU___	+ALL	D
3	list of contents índice	circuit diagram esquemas eléctricos		=PU___	+ALL	D
4	list of contents índice	circuit diagram esquemas eléctricos		=PU___	+ALL	D
5	list of contents índice	circuit diagram esquemas eléctricos		=PU___	+ALL	D
6	list of contents índice	circuit diagram esquemas eléctricos		=PU___	+ALL	D
7	list of contents índice	circuit diagram esquemas eléctricos		=PU___	+ALL	D
8	list of contents índice	circuit diagram esquemas eléctricos		=PU___	+ALL	D
9	list of contents índice	circuit diagram esquemas eléctricos		=PU___	+ALL	D
30	explanation explicación	variant variante		=PU___	+ALL	C
40	control station panel de mando	PU___A PU___B	operating side Lado de operador	=PU___	+All	C
41	printing tower torre de impresión	clutch embrague	drive side Lado de accionamientos	=PU___	+All	C
42	printing tower torre de impresión	view vista	operating side Lado de operador	=PU___	+All	C
43	printing tower torre de impresión	view vista	drive side Lado de accionamientos	=PU___	+All	C
44	guards protecciones	PU___A PU___B	operating side Lado de operador	=PU___	+All	C
51	overview visión de conjunto	bus connection Conexión de bus	CS31	=PU___	+ALL	C
52	overview visión de conjunto	bus connection Conexión de bus	CS31	=PU___	+ALL	C
60	disposition disposición	control control	cabinet armario	=PU___	+PUCL	D
61	disposition disposición	control control	cabinet armario	=PU___	+PUCR	D

Notre maison conserve en tout temps le droit de propriété sur ces dessins et annexes, confiés personnellement au destinataire. Ils ne doivent pas, sans notre autorisation écrite, être copiés, reproduits, communiqués à des tiers ou mis à leur disposition.
© Copyright 2005 ABB. All rights reserved.

We reserve all rights in this document and in the information contained therein. Reproduction, use or disclosure to third parties without express authority is strictly forbidden.
© Copyright 2005 ABB. All rights reserved.

Fuer dieses Dokument und den darin dargestellten Gegenstand behalten wir uns alle Rechte vor. Vervielfaeltigung, Bekanntgabe an Dritte oder Verwertung seines Inhalts sind ohne unsere ausdrueckliche Zustimmung verboten.
© Copyright 2005 ABB. All rights reserved.

page pagina	title 1 título 1	title 2 título 2	title 3 título 3	installation maquinaria	location lugar de instal.	rev. rev.
65	disposition disposición	assembly instruction instruc.de montaje	cabinet armario	=PU___	+PUCx	C
69	Ethernet	printing unit unidad de impresión	Switch	=PU___	+PUCL	C
70	AC500 CPU	printing unit unidad de impresión	printing unit cuerpo de impresión	=PU___	+PUCL	C
71	in-/outputs entradas/salidas	digital digital	in generell en general	=PU___	+PUCL	D
72	in-/outputs entradas/salidas	analog analógico	in generell en general	=PU___	+PUCL	C
75	AC500 CS31-BUS	coupler acoplador	safety circuit circuito de seguridad	=PU___	+PUCR	C
76	in-/outputs entradas/salidas	digital digital	safety circuit circuito de seguridad	=PU___	+PUCR	C
77	control station panel de mando	mobile command panel mando portatil		=PU___	+PUCL	C
78	control station panel de mando	mobile command panel mando portatil	plug XP11A clavija XP11A	=PU___	+PUCL	C
79	control station panel de mando	mobile command panel mando portatil	plug XP11B clavija XP11B	=PU___	+PUCL	C
81	vertical vertical	clutch embrague		=PU___	+PUCL	C
85	Safe/Ready	signal lamp indicador lum.		=PU___	+PUCR	C
86	guard monitoring monitoreo de protección	arch guard arco protector		=PU___	+PUCL	D
87	guard monitoring monitoreo de protección	left izquierda	right derecha	=PU___	+PUCL	D
90	lubrication lubricacion			=PU___	+PUCR	C
95	compensation Compensación			=PU___	+PUCL	C
98	drive propulsión	enable start arranque desbloqueo		=PU___	+PUCL	C
99	emergency-stop parada de emergencia	interface interfaz		=PU___	+PUCL	D
100	supply fuente de alimentación	230VAC/400VAC		=PU___	+PUCL	C

Notre maison conserve en tout temps le droit de propriété sur ces dessins et annexes, confiés personnellement au destinataire. Ils ne doivent pas, sans notre autorisation écrite, être copiés, reproduits, communiqués à des tiers ou mis à leur disposition.
© Copyright 2005 ABB. All rights reserved.

We reserve all rights in this document and in the information contained therein. Reproduction, use or disclosure to third parties without express authority is strictly forbidden.
© Copyright 2005 ABB. All rights reserved.

Fuer dieses Dokument und den darin dargestellten Gegenstand behalten wir uns alle Rechte vor. Vervielfaeltigung, Bekanntgabe an Dritte oder Verwertung seines Inhalts sind ohne unsere ausdrueckliche Zustimmung verboten.
© Copyright 2005 ABB. All rights reserved.

page pagina	title 1 título 1	title 2 título 2	title 3 título 3	installation maquinaria	location lugar de instal	rev. rev.
105	supply Alimentación	24VDC	control control	=PU___	+PUCL	C
106	supply Alimentación	24VDC	power potencia	=PU___	+PUCL	C
111	AC500 CS31-BUS	coupler acoplador	printing couple 1 cuerpo de impresión 1	=PU___	+PUCL	C
115	in-/outputs entradas/salidas	digital digital	printing couple 1 cuerpo de impresión 1	=PU___	+PUCL	C
116	in-/outputs entradas/salidas	digital digital	printing couple 1 cuerpo de impresión 1	=PU___	+PUCL	C
118	in-/outputs entradas/salidas	digital digital	ink unit 1 mecanismo entintador 1	=PU___	+PUCL	C
119	in-/outputs entradas/salidas	analog analógico	ink unit 1 mecanismo entintador 1	=PU___	+PUCL	C
120	position server Encoder de valor absoluto			=PU___	+PUCL	C
129	start-up warning advertencia de puesta#en marcha			=PU___	+PUCL	C
131	control station A1 panel de mando A1	operator side por el lado del usuario	tunnel tunel	=PU___	+PUCL	C
134	control station A6 panel de mando A6	operator side por el lado del usuario		=PU___	+PUCL	C
138	control station panel de mando	Forward / Reverse adelante / atrás	stop&lock parada y bloqueo	=PU___	+PUCL	C
140	solenoid valve válvula solenoidal	OPS		=PU___	+PUCL	C
160	side register registro lateral	control control	ParkerDrive PK3	=PU___	+PUCL	C
161	side register registro lateral	motor motor		=PU___	+PUCL	C
165	circumferential register registro circunferencial	control control	ParkerDrive PK3	=PU___	+PUCL	C
166	circumferential register registro circunferencial	motor motor		=PU___	+PUCL	C
170	printing couple cuerpo de impresión	ink screws Tornillos de tinta	Device MUX1	=PU___	+PUCL	C
171	printing couple cuerpo de impresión	ink screws Tornillos de tinta	ink zone A zona de tinta A	=PU___	+PUCL	C

Notre maison conserve en tout temps le droit de propriété sur ces dessins et annexes, confiés personnellement au destinataire. Ils ne doivent pas, sans notre autorisation écrite, être copiés, reproduits, communiqués à des tiers ou mis à leur disposition.
© Copyright 2005 ABB. All rights reserved.

We reserve all rights in this document and in the information contained therein. Reproduction, use or disclosure to third parties without express authority is strictly forbidden.
© Copyright 2005 ABB. All rights reserved.

Fuer dieses Dokument und den darin dargestellten Gegenstand behalten wir uns alle Rechte vor. Vervielfaeltigung, Bekanntgabe an Dritte oder Verwertung seines Inhalts sind ohne unsere ausdrueckliche Zustimmung verboten.
© Copyright 2005 ABB. All rights reserved.

page pagina	title 1 título 1	title 2 título 2	title 3 título 3	installation maquinaria	location lugar de instal	rev. rev.
172	printing couple cuerpo de impresión	ink screws Tornillos de tinta	ink zone B zona de tinta B	=PU___	+PUCL	C
173	printing couple cuerpo de impresión	ink screws Tornillos de tinta	ink zone C zona de tinta C	=PU___	+PUCL	C
174	printing couple cuerpo de impresión	ink screws Tornillos de tinta	ink zone D zona de tinta D	=PU___	+PUCL	C
175	printing couple cuerpo de impresión	ink-fountain roller cilindro del tintero		=PU___	+PUCL	C
176	printing couple cuerpo de impresión	ink-fountain roller cilindro del tintero	duct roller cilindro del tintero	=PU___	+PUCL	C
177	printing couple cuerpo de impresión	ink-fountain roller cilindro del tintero	wash up blade rasqueta de lavado	=PU___	+PUCL	C
180	spray bar barra de pulverización			=PU___	+PUCL	C
200	supply fuente de alimentación	230VAC/400VAC		=PU___	+PUCR	C
205	supply Alimentación	control control		=PU___	+PUCR	C
206	supply Alimentación	24VDC	power potencia	=PU___	+PUCR	C
211	AC500 CS31-BUS	coupler acoplador	printing couple 2 cuerpo de impresión 2	=PU___	+PUCR	C
215	in-/outputs entradas/salidas	digital digital	printing couple 2 cuerpo de impresión 2	=PU___	+PUCR	C
216	in-/outputs entradas/salidas	digital digital	printing couple 2 cuerpo de impresión 2	=PU___	+PUCR	C
218	in-/outputs entradas/salidas	digital digital	ink unit 2 mecanismo entintador 2	=PU___	+PUCR	C
219	in-/outputs entradas/salidas	analog analógico	ink unit 2 mecanismo entintador 2	=PU___	+PUCR	C
224	printing unit unidad de impresión	clutch embrague		=PU___	+PUCR	C
232	control station A2 panel de mando A2	drive side (side II) Lado de accionamientos (lado 2)	tunnel tunel	=PU___	+PUCR	C
234	control station A7 panel de mando A7	operator side por el lado del usuario		=PU___	+PUCR	C
238	control station panel de mando	signal señal	Forward / Reverse adelante / atrás	=PU___	+PUCR	C

Notre maison conserve en tout temps le droit de propriété sur ces dessins et annexes, confiés personnellement au destinataire. Ils ne doivent pas, sans notre autorisation écrite, être copiés, reproduits, communiqués à des tiers ou mis à leur disposition.
© Copyright 2005 ABB. All rights reserved.

We reserve all rights in this document and in the information contained therein. Reproduction, use or disclosure to third parties without express authority is strictly forbidden.
© Copyright 2005 ABB. All rights reserved.

Fuer dieses Dokument und den darin dargestellten Gegenstand behalten wir uns alle Rechte vor. Vervielfaeltigung, Bekanntgabe an Dritte oder Verwertung seines Inhalts sind ohne unsere ausdrueckliche Zustimmung verboten.
© Copyright 2005 ABB. All rights reserved.

page pagina	title 1 título 1	title 2 título 2	title 3 título 3	installation maquinaria	location lugar de instal.	rev. rev.
240	solenoid valve válvula solenoidal	OPS		=PU___	+PUCR	C
260	side register registro lateral	control control	ParkerDrive PK3	=PU___	+PUCR	C
261	side register registro lateral	motor motor		=PU___	+PUCR	C
265	circumferential register registro circunferencial	control control	ParkerDrive PK3	=PU___	+PUCR	C
266	circumferential register registro circunferencial	motor motor		=PU___	+PUCR	C
270	printing couple cuerpo de impresión	ink screws Tornillos de tinta	Device MUX1	=PU___	+PUCR	C
271	printing couple cuerpo de impresión	ink screws Tornillos de tinta	ink zone A zona de tinta A	=PU___	+PUCR	C
272	printing couple cuerpo de impresión	ink screws Tornillos de tinta	ink zone B zona de tinta B	=PU___	+PUCR	C
273	printing couple cuerpo de impresión	ink screws Tornillos de tinta	ink zone C zona de tinta C	=PU___	+PUCR	C
274	printing couple cuerpo de impresión	ink screws Tornillos de tinta	ink zone D zona de tinta D	=PU___	+PUCR	C
275	printing couple cuerpo de impresión	ink-fountain roller cilindro del tintero		=PU___	+PUCR	C
276	printing couple cuerpo de impresión	ink-fountain roller cilindro del tintero	control station panel de mando	=PU___	+PUCR	C
277	printing couple cuerpo de impresión	ink-fountain roller cilindro del tintero	ductor blade holder barra de racleta	=PU___	+PUCR	C
280	spray bar barra de pulverización			=PU___	+PUCR	C

©Copyright 2005 ABB. All rights reserved. We reserve all rights in this document and in the information contained therein. Reproduction, use or disclosure to third parties without express authority is strictly forbidden.

Explanation of the variant
Explicación de las variantes

A =	all todos	printing unit unidad de impresión		
B =	only sólo	printing unit unidad de impresión	bottom abajo	=PU___A
C =	only sólo	printing unit unidad de impresión	top arriba	=PU___B
N =	retrofittable reequipable			

explanation explicación	installation maquinaria	locality lugar

operating side (side I)
Lado de operador (lado 1)

=PU____ ---> D31, D32, D41, D42

control control		mechan. mecán.	
P1	--->	+P10	+PUCL
P3	--->	+P5110	
P2	--->	+P13	+PUCR
P4	--->	+P5113	

OPS : Operator Side

DRS : Drive Side

Issue	2008-10-15 TK	XYZ Project ID	ABB ABBCH ATBN	Title: explanation / explicación — variant / variante	3BHS2#####	=PU___	Page 30
Check.	RePao	ABB: A-20#####			Language: EN ES	Form: A3	+ALL	<6 >40
©ABBCH	2010-01-12 16:14	OEM: ___ system / sistema					
Rev.		Std Name: OEM	Std Issue: Typ				

©Copyright 2005 ABB. All rights reserved. We reserve all rights in this document and in the information contained therein. Reproduction, use or disclosure to third parties without express authority is strictly forbidden.

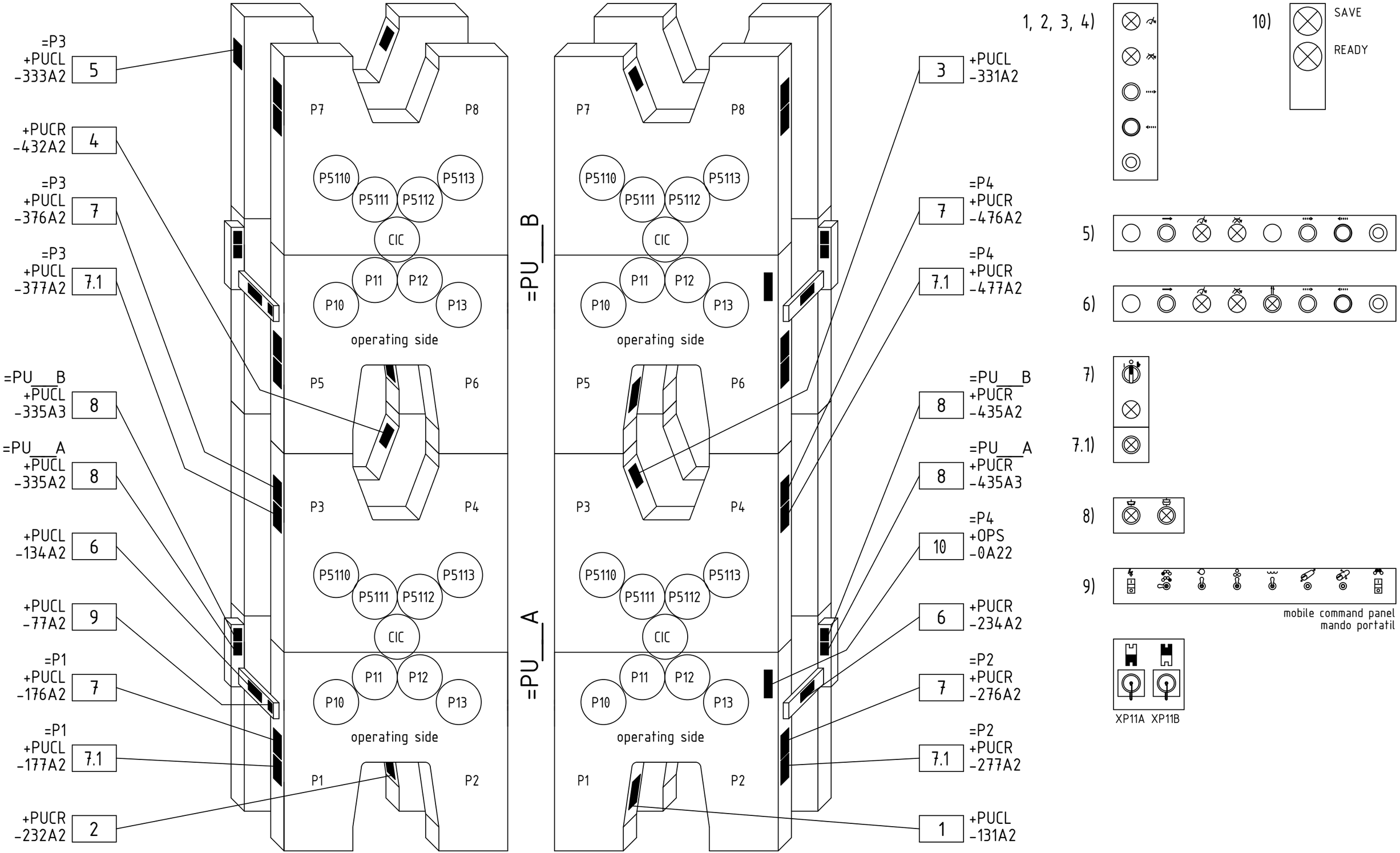

Issue	2008-11-19 mr	XYZ Project ID	ABB ATBN	Title: control station / panel de mando	PU__A / PU__B	operating side / Lado de operador	3BHS2#####	=PU___	Page 40
Check.	RePao	ABB: A-20#####					Language: EN ES	Form: A3	+ALL	<30 >41
©ABBCH	2010-01-12 16:14	OEM: ___ system / sistema								
Rev.		Std Name: OEM	Std Issue: Typ						

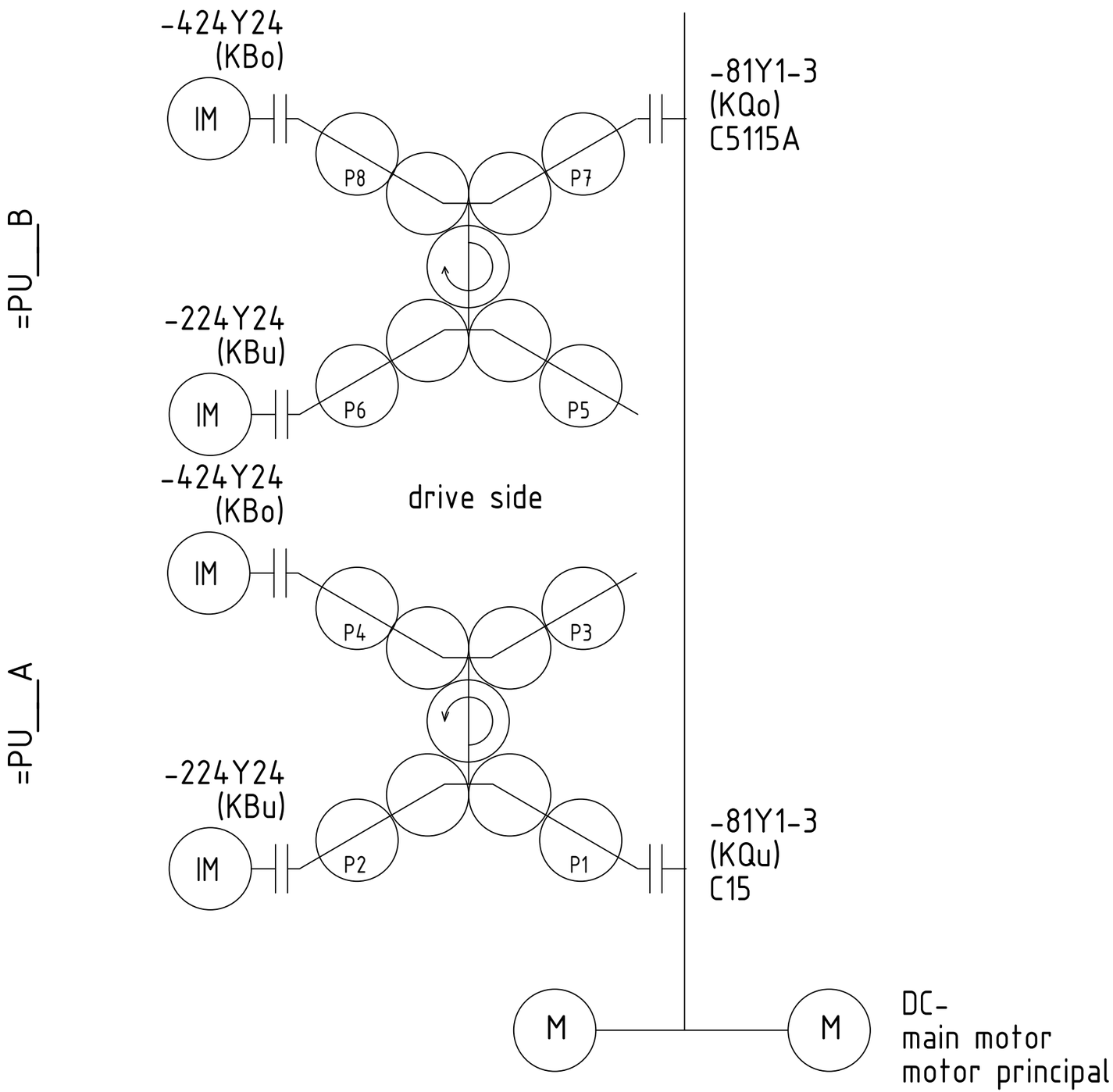

©Copyright 2005 ABB. All rights reserved. We reserve all rights in this document and in the information contained therein. Reproduction, use or disclosure to third parties without express authority is strictly forbidden.

Issue	2008-11-19 mr	XYZ Project ID	ABB ABBCH ATBN	Title: printing tower / torre de impresión — clutch / embrague — drive side / Lado de accionamientos	3BHS2#####
Check.	RePao	ABB: A-20#####			Language: EN ES
©ABBCH	2010-01-12 16:14	OEM: ___ system / sistema			Form: A3
Rev.		Std Name: OEM Std Issue: Typ			

=PU___ | Page 41 | +ALL | <40 >42

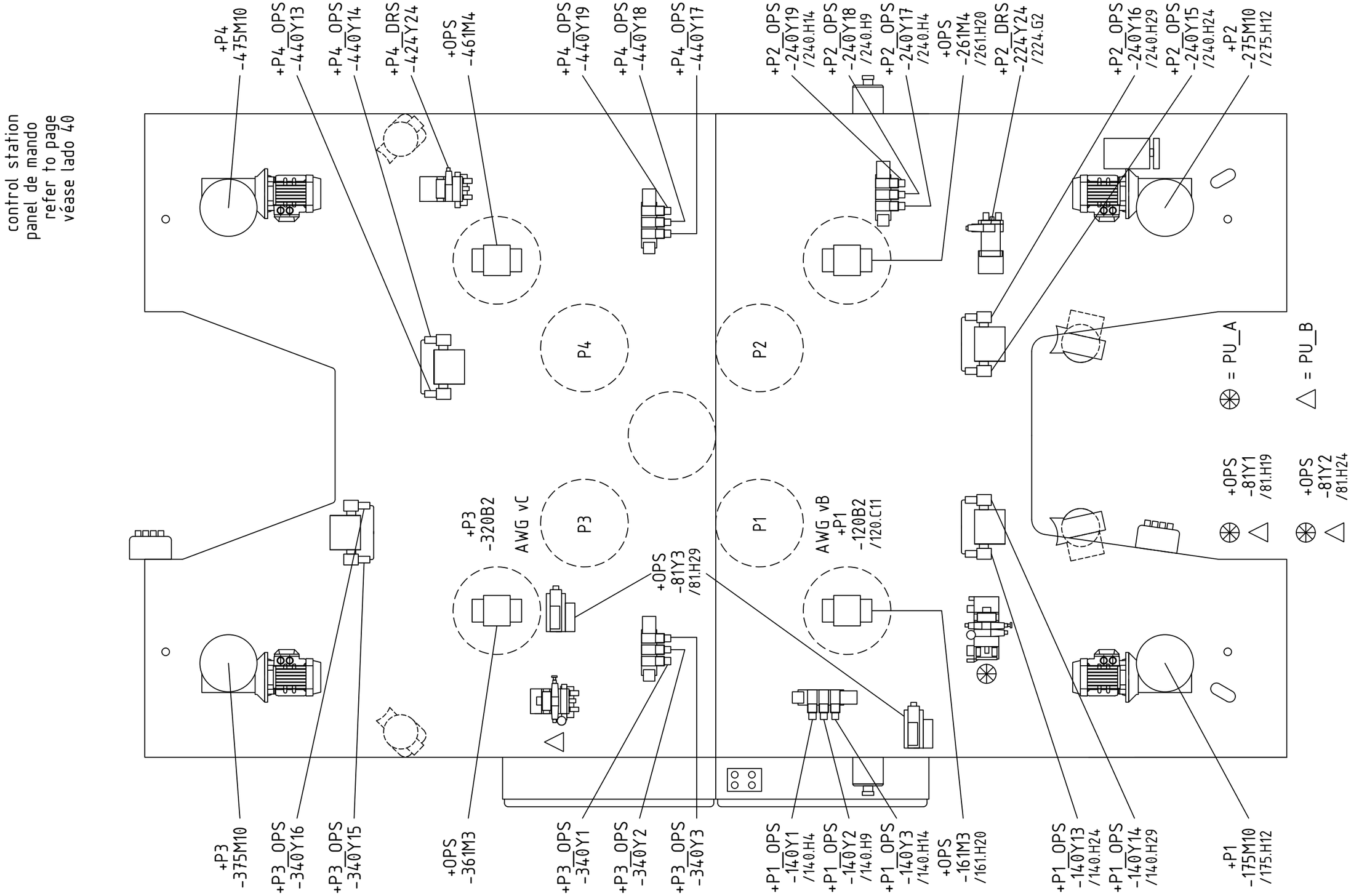

©Copyright 2005 ABB. All rights reserved. We reserve all rights in this document and in the information contained therein. Reproduction, use or disclosure to third parties without express authority is strictly forbidden.

Issue	2009-01-12 mr	XYZ Project ID	ABB ABBCH ATBN	Title: printing tower / torre de impresión — view / vista — operating side / Lado de operador	3BHS2#####	=PU___	Page 42
Check.	2010-01-12 RePao	ABB: A-20#####			Language: EN ES	Form: A3	+ALL
©ABBCH	2010-01-12 16:14	OEM: ___ system / sistema					<41 >43
Rev. 0	2010-01-12 RePao	Std Name: OEM	Std Issue: Typ				

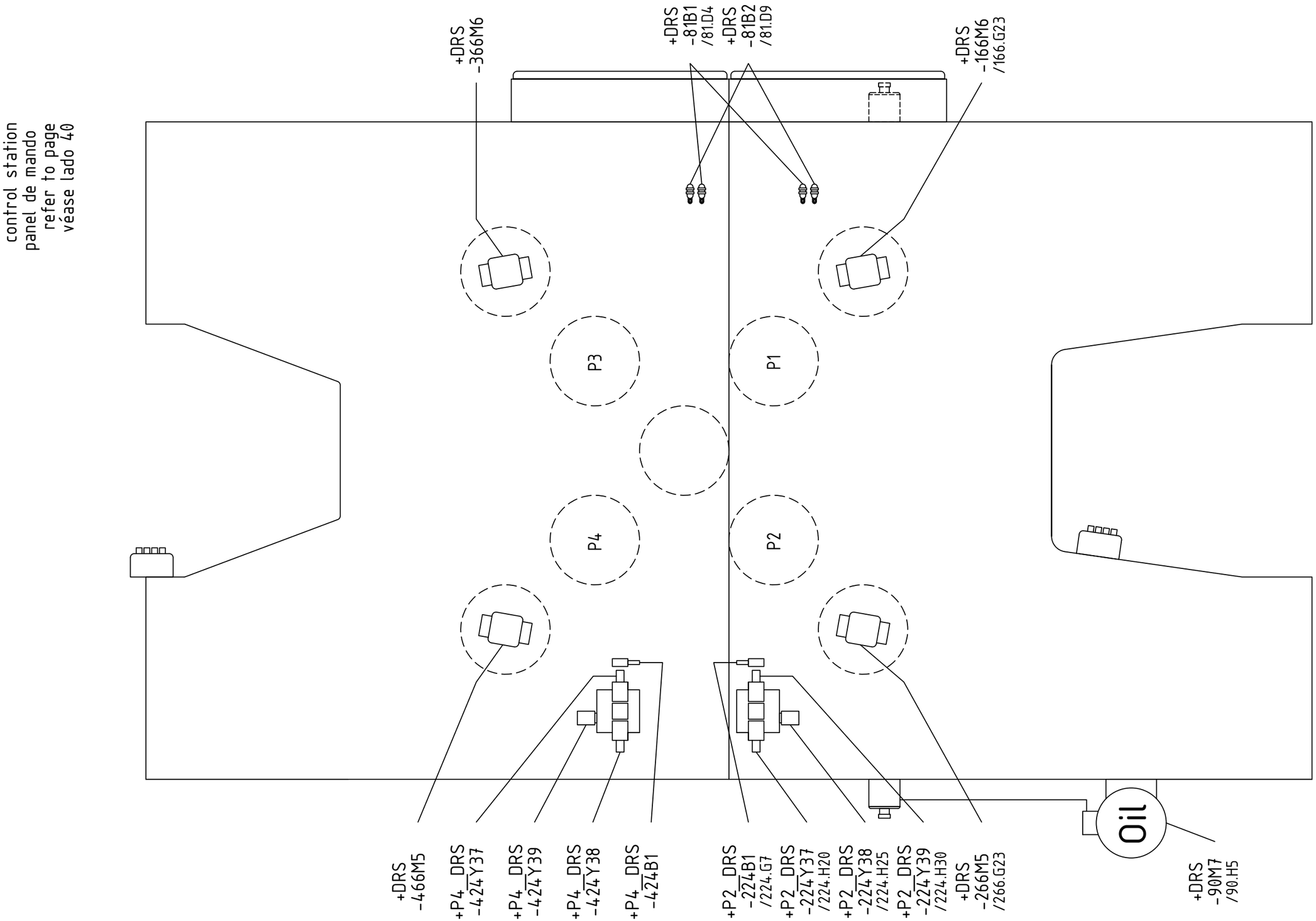

©Copyright 2005 ABB. All rights reserved. We reserve all rights in this document and in the information contained therein. Reproduction, use or disclosure to third parties without express authority is strictly forbidden.

Issue	2009-01-12 mr	XYZ Project ID	ABB	Title: printing tower / torre de impresión — view / vista — drive side / Lado de accionamientos	3BHS2#####
Check.	2010-01-12 RePao	ABB: A-20#####	ABBCH ATBN		=PU___
©ABBCH	2010-01-12 16:14	OEM: ___ system / sistema			Page 43
Rev. 0	2010-01-12 RePao	Std Name: OEM Std Issue: Typ			Language: EN ES Form: A3
					+ALL
					<42 >44

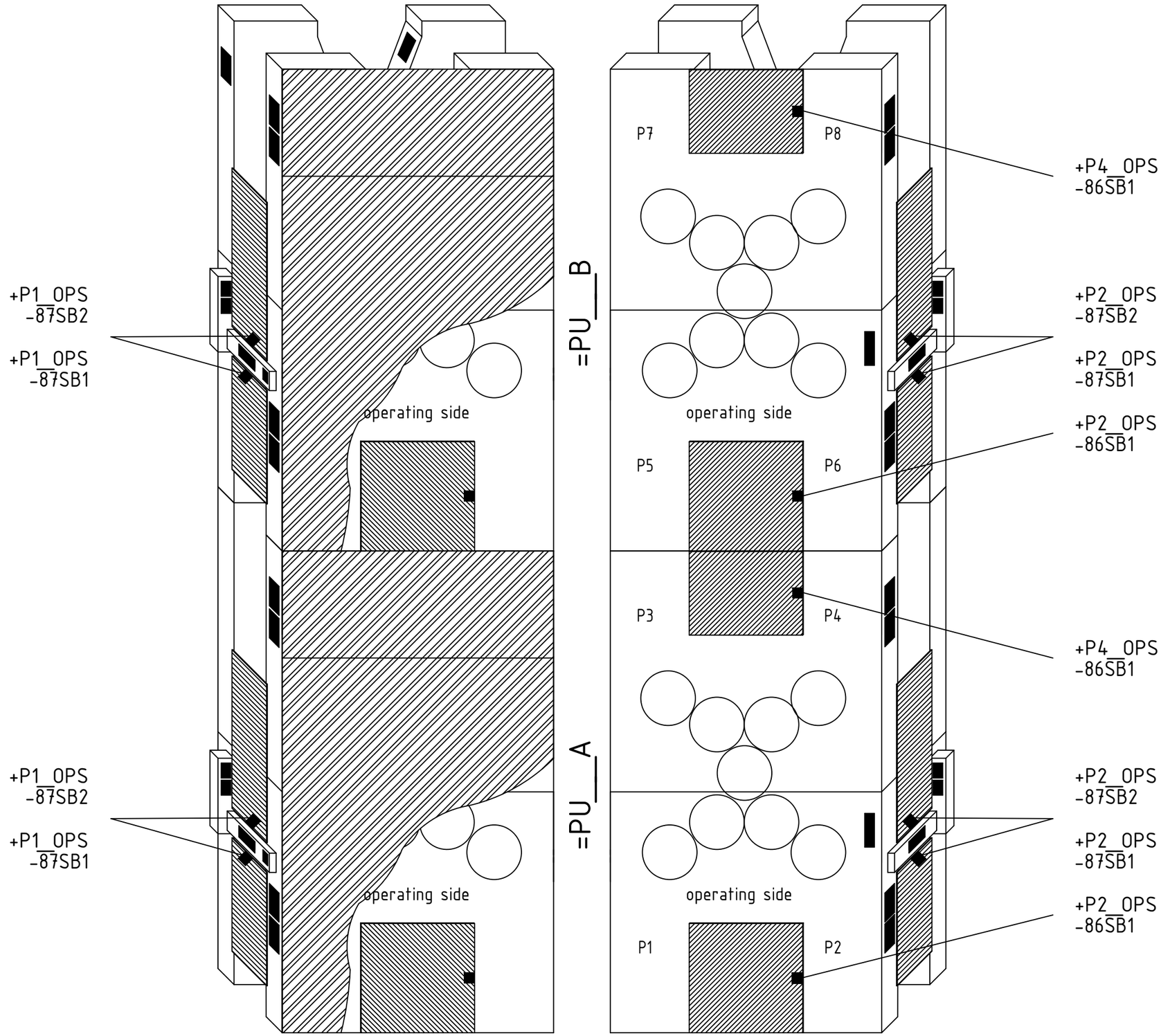

©Copyright 2005 ABB. All rights reserved. We reserve all rights in this document and in the information contained therein. Reproduction, use or disclosure to third parties without express authority is strictly forbidden.

Issue	2009-08-13 mr	XYZ Project ID	ABB ABBCH ATBN	Title: guards protecciones	PU___A PU___B
Check.	RePao	ABB: A-20#####			
©ABBCH	2010-01-12 16:14	OEM: ___ system sistema			
Rev.		Std Name: OEM Std Issue: Typ			

operating side
Lado de operador

3BHS2#####

Language: EN ES
Form: A3

=PU___

+ALL

Page 44
<43
>51

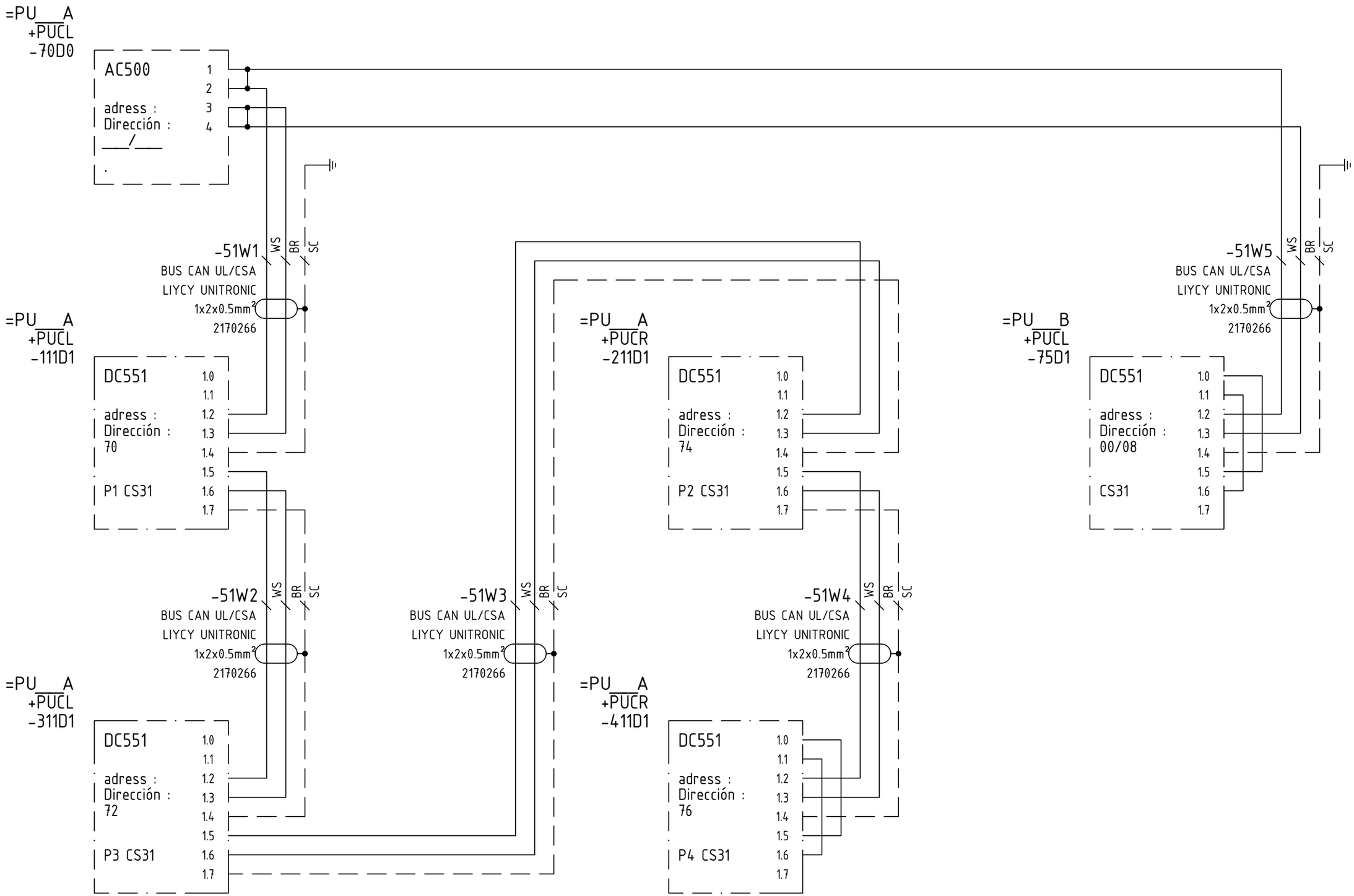

©Copyright 2005 ABB. All rights reserved. We reserve all rights in this document and in the information contained therein. Reproduction, use or disclosure to third parties without express authority is strictly forbidden.

Issue	2008-10-15 TK	XYZ Project ID	ABBCH ATBN	Title: overview / visión de conjunto — bus connection / Conexión de bus — CS31	3BHS2#####
Check.	2010-01-12 RePao	ABB: A-20#####			=PU___
©ABBCH	2010-01-12 16:14	OEM: ___ system / sistema			Page 51
Rev. 0	2010-01-12 RePao	Std Name: OEM Std Issue: Typ		Language: EN ES Form: A3	+ALL <44 >52

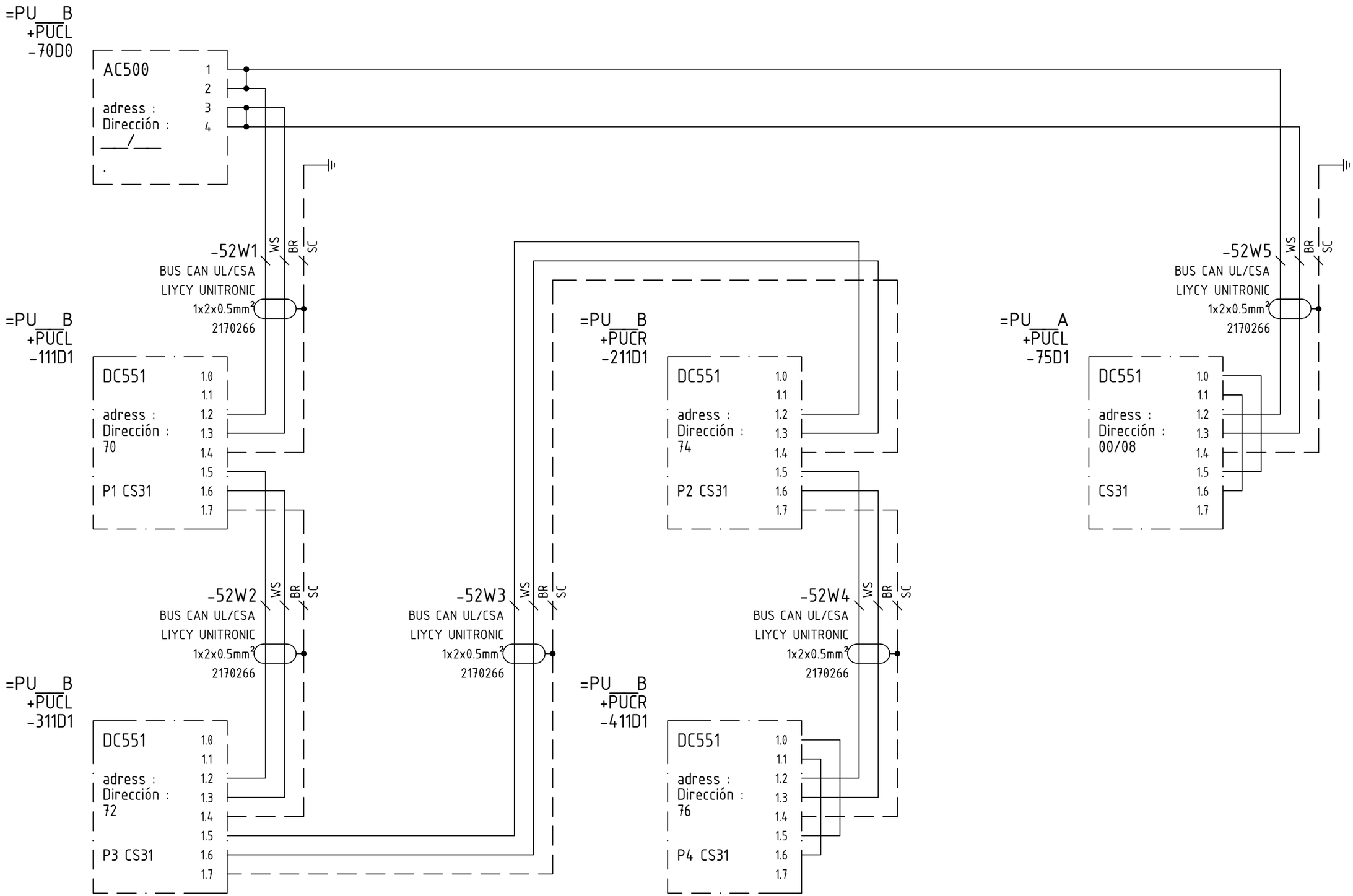

©Copyright 2005 ABB. All rights reserved. We reserve all rights in this document and in the information contained therein. Reproduction, use or disclosure to third parties without express authority is strictly forbidden.

Issue	2008-10-29 TK	XYZ Project ID	ABBCH ATBN	Title: overview / visión de conjunto — bus connection / Conexión de bus — CS31	3BHS2#####
Check.	2010-01-12 RePao	ABB: A-20#####			=PU___
©ABBCH	2010-01-12 16:14	OEM: ___ system / sistema			Page 52
Rev. 0	2010-01-12 RePao	Std Name: OEM Std Issue: Typ		Language: EN ES Form: A3	+ALL <51 >60

©Copyright 2005 ABB. All rights reserved. We reserve all rights in this document and the information contained therein. Reproduction, use or disclosure to third parties without express authority is strictly forbidden.

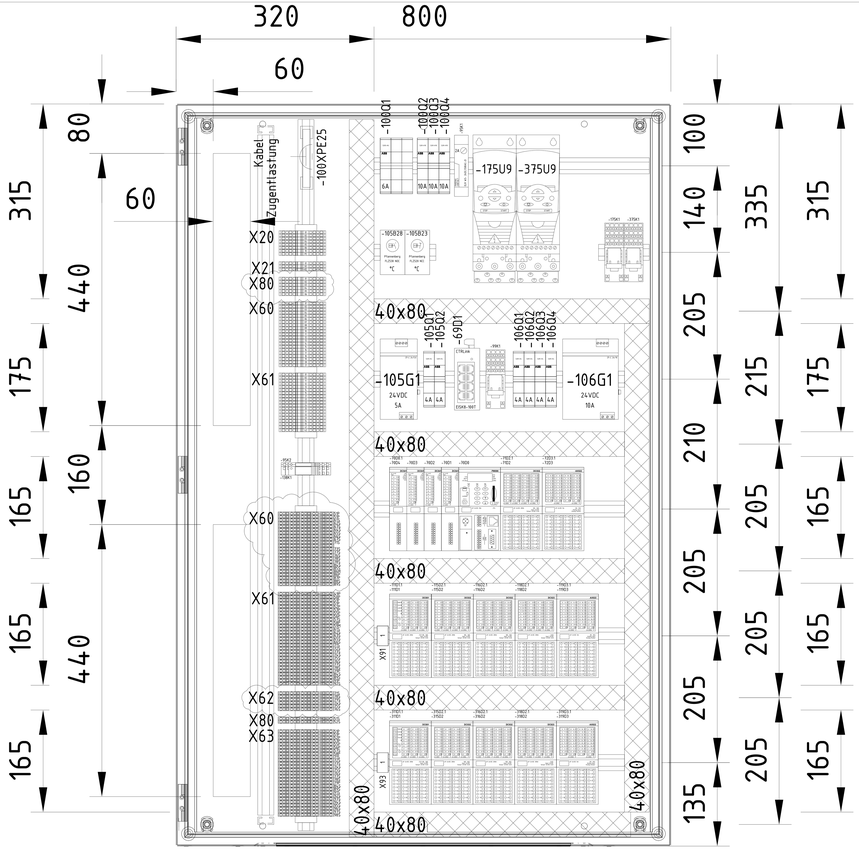

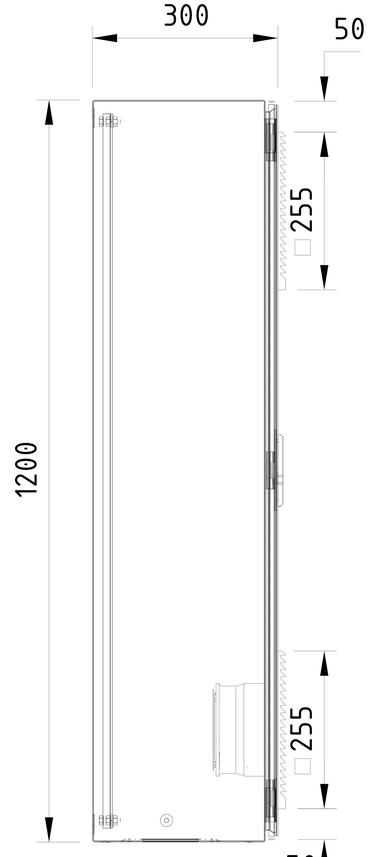

Rittal
AE 1280.500
RAL5015
IP55

fan
ventilador

air
aire

230m³/h
max. 25°C
max. 60% humidity
humedad del aire

assembly instruction
instruc.de montaje

central
centrado

cut-outs
recortes

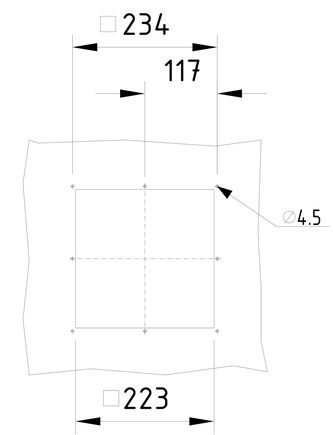

SK 3325.107

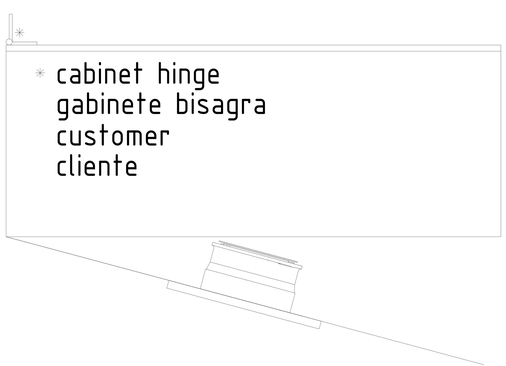

Issue	2008-11-12 TK	XYZ Project ID	.	ABBCH ATBN	Title: disposition disposición	control control	cabinet armario	3BHS2#####	=PU___	Page 60
Check.	2010-01-12 RePao	ABB: A-20##### OEM: ___	system sistema					Language: EN ES	Form: A3	+PUCL	<52 >65
Rev. 0	2010-01-12 RePao	Std Name: OEM	Std Issue: Typ								

©Copyright 2005 ABB. All rights reserved. We reserve all rights in this document and in the information contained therein. Reproduction, use or disclosure to third parties without express authority is strictly forbidden.

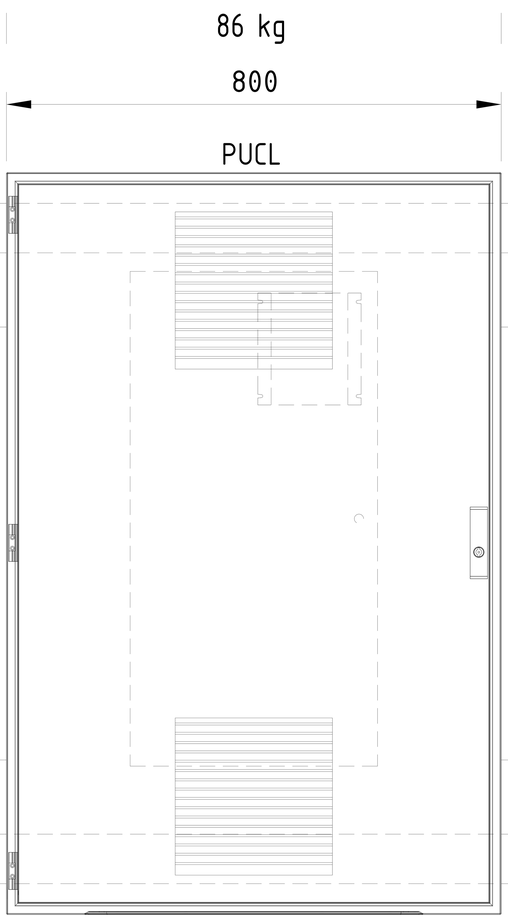

16A (USV)

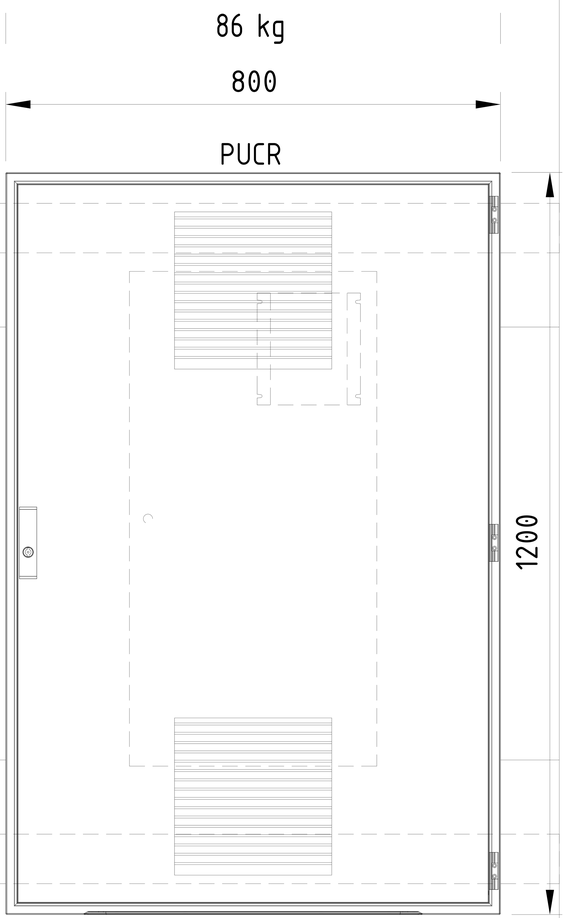

16A (USV)

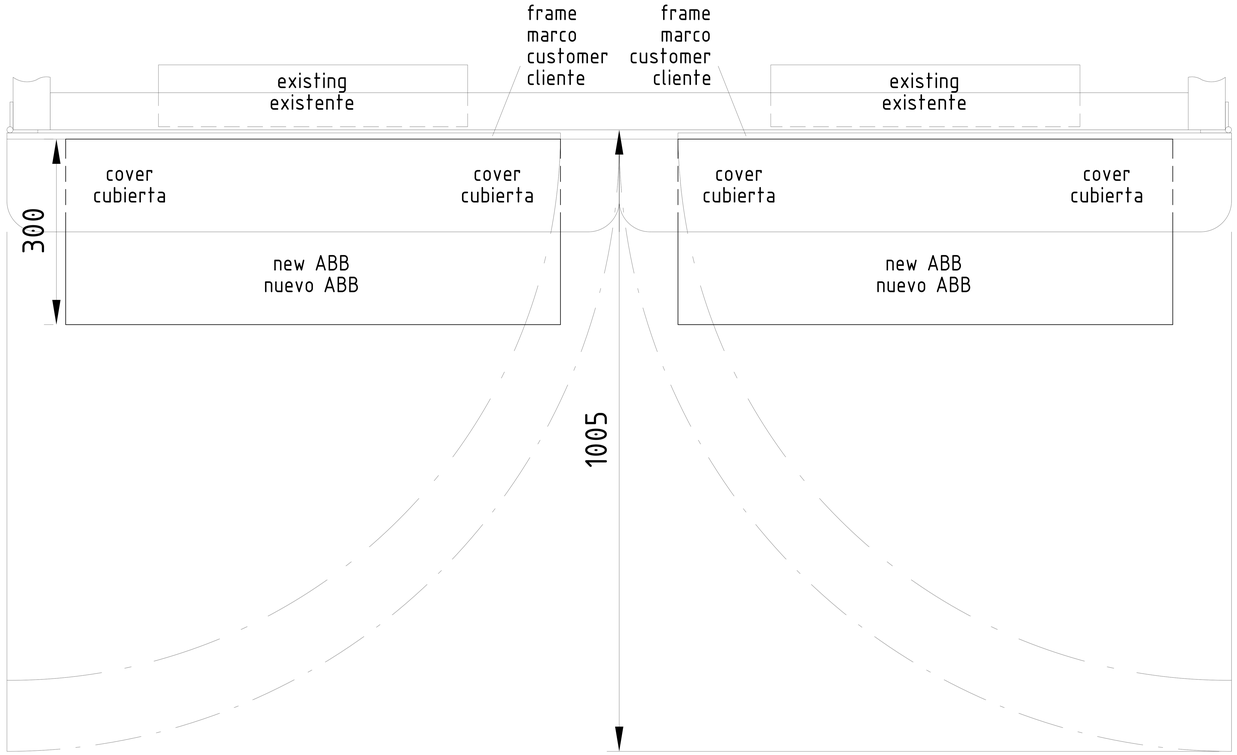

view from top
vista desde arriba

Issue	2008-11-12 TK	XYZ Project ID	.	ABBCH ATBN	Title: disposition disposición	assembly instruction instruc.de montaje	cabinet armario	3BHS2#####	=PU___	Page 65
Check.	2010-01-12 RePao	ABB: A-20##### OEM: ___	system sistema					Language: EN ES / Form: A3	+PUCx	<60 >69
Rev. 0	2010-01-12 RePao	Std Name: OEM	Std Issue: Typ							

©Copyright 2005 ABB. All rights reserved. We reserve all rights in this document and in the information contained therein. Reproduction, use or disclosure to third parties without express authority is strictly forbidden.

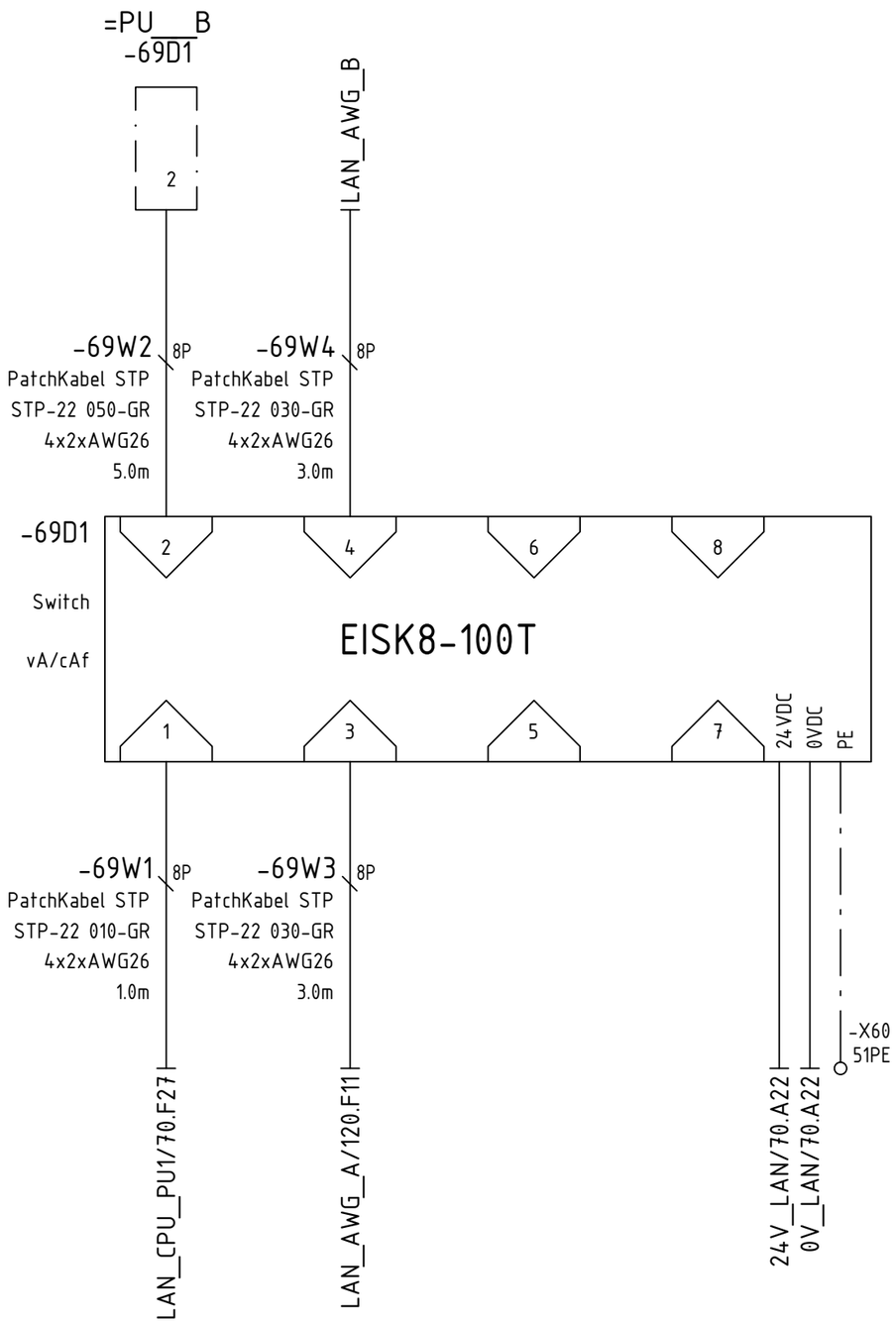

Issue	2008-10-15 TK	XYZ Project ID		ABB ABBCH ATBN	Title: Ethernet	printing unit unidad de impresión	Switch
Check.	2010-01-12 RePao	ABB: A-20#####	system sistema				
©ABBCH	2010-01-12 16:14	OEM: ___					
Rev. 0	2010-01-12 RePao	Std Name: OEM	Std Issue: Typ				

3BHS2#####	=PU___	Page 69	
Language: EN ES	Form: A3	+PUCL	<65 >70

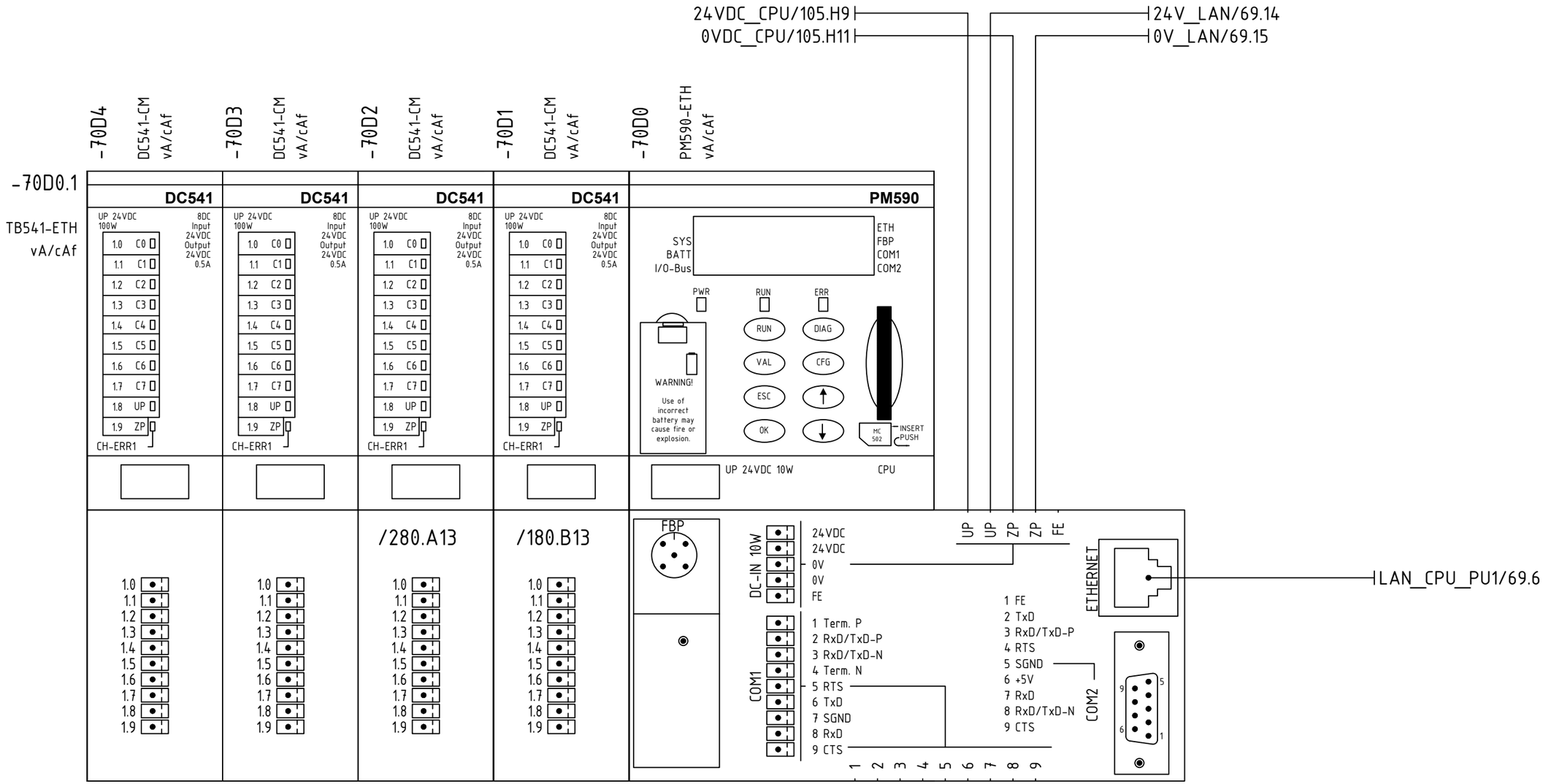

CS31-bus page 51/52
CS31-bus pagina 51/52

©Copyright 2005 ABB. All rights reserved. We reserve all rights in this document and in the information contained therein. Reproduction, use or disclosure to third parties without express authority is strictly forbidden.

Issue	2008-10-15 TK	XYZ Project ID	ABBCH ATBN	Title: AC500 CPU	3BHS2#####
Check.	2010-01-12 RePao	ABB: A-20#####		printing unit / unidad de impresión	=PU___
©ABBCH	2010-01-12 16:14	OEM: ___ system / sistema		printing unit / cuerpo de impresión	Page 70
Rev. 0	2010-01-12 RePao	Std Name: OEM Std Issue: Typ		Language: EN ES Form: A3	+PUCL <69 >71

©Copyright 2005 ABB. All rights reserved. We reserve all rights in this document and in the information contained therein. Reproduction, use or disclosure to third parties without express authority is strictly forbidden.

-71D2
DC532
vA/cAf

DC532

I0	DI_Compensation_FDBK	I8	DI_Drive_StartEnable	C16	DO_VertClutch_Diseng	C24	DO_Compensation_Right
I1	DI_Estop_OK	I9		C17	DO_VertClutch_Engaged	C25	DO_Compensation_Left
I2	DI_UpperEstop	I10	DI_LeftGuards	C18	DO_VertClutch_Exhaust	C26	-
I3	DI_LowerArchGuard	I11	DI_RightGuards	C19	DO_LeftGuards_Unlock	C27	-
I4	DI_UpperArchGuard	I12	DI_LowerEstop	C20	DO_RightGuards_Unlock	C28	-
I5	DI_VertClutch_Eng	I13	DI_RightGuards_Locked	C21	DO_DriveStart_Enable	C29	-
I6	DI_VertClutch_Diseng	I14	DI_LowerArchGuard_Locked	C22	DO_LowerArchGuard_Unlock	C30	-
I7	DI_LeftGuards_Locked	I15	DI_UpperArchGuard_Locked	C23	DO_UpperArchGuard_Unlock	C31	-
1.8	UP	2.8	UP	3.8	UP	4.8	UP
1.9	ZP	2.9	ZP	3.9	ZP	4.9	ZP
CH-ERR1		CH-ERR2		CH-ERR3		CH-ERR4	

PU ALG1 UP 24VDC 200W

16DI 16DC
Input 24VDC
Output 24VDC 0.5A

1.0	/95.E15	2.0	/98.A8	3.0	/81.B19	4.0	/95.B17
1.1	/99.G8	2.1		3.1	/81.B24	4.1	/95.B20
1.2	/99.G27	2.2	/87.G8	3.2	/81.B29	4.2	
1.3	/86.G5	2.3	/87.G24	3.3	/87.B7	4.3	
1.4	/86.G22	2.4	/99.G18	3.4	/87.B23	4.4	
1.5	/81.G4	2.5	/87.G30	3.5	/98.B15	4.5	
1.6	/81.G10	2.6	/86.G11	3.6	/86.B8	4.6	
1.7	/87.G14	2.7	/86.G28	3.7	/86.B25	4.7	
1.8	UP	2.8	UP	3.8	UP	4.8	UP
1.9	ZP	2.9	ZP	3.9	ZP	4.9	ZP

106.H4 24VDC_Alg1 -X60 51P 51P
106.H5 0VDC_Alg1 -X60 51M 51M

24VDC_PU 72.G1
0VDC_PU 72.G1

-71D2.1

TU516
vA/cAf

24VDC_AntStartFrg/98.C3
0VDC_AntStartFrg/98.C3

Issue	2008-10-23 TK	XYZ Project ID		ABB ABBCH ATBN	Title: in-/outputs digital in generell entradas/salidas digital en general	3BHS2#####	=PU___	Page 71
Check.	2010-01-12 RePao	ABB: A-20#####	system			Language: EN ES	Form: A3	+PUCL	<70 >72
©ABBCH	2010-01-12 16:14	OEM: ___	sistema						
Rev. 0	2010-01-12 RePao	Std Name: OEM	Std Issue: Typ						

©Copyright 2005 ABB. All rights reserved. We reserve all rights in this document and in the information contained therein. Reproduction, use or disclosure to third parties without express authority is strictly forbidden.

-72D3
AX522
vA/cAf

AX522

I0-	-	I0+	AI_CompAv	O0-	-	O0+	-
I1-	-	I1+	-	O1-	-	O1+	-
I2-	-	I2+	-	O2-	-	O2+	-
I3-	-	I3+	-	O3-	-	O3+	-
I4-	-	I4+	-	O4-	-	O4+	-
I5-	-	I5+	-	O5-	-	O5+	-
I6-	-	I6+	-	O6-	-	O6+	-
I7-	-	I7+	-	O7-	-	O7+	-
1.8	UP	2.8	UP	3.8	UP	4.8	UP
1.9	ZP	2.9	ZP	3.9	ZP	4.9	ZP
		CH-ERR2				CH-ERR4	

PU ALG2 — UP 24VDC 5W

8AI 8AO
Analog Input
Analog Output

1.0	/95.C6	2.0	/95.C6	3.0		4.0	
1.1		2.1		3.1		4.1	
1.2		2.2		3.2		4.2	
1.3		2.3		3.3		4.3	
1.4		2.4		3.4		4.4	
1.5		2.5		3.5		4.5	
1.6		2.6		3.6		4.6	
1.7		2.7		3.7		4.7	
1.8	UP	2.8	UP	3.8	UP	4.8	UP
1.9	ZP	2.9	ZP	3.9	ZP	4.9	ZP

71.32 24VDC_PU
71.32 0VDC_PU

-72D3.1

TU516
vA/cAf

Issue	2008-10-15 TK	XYZ Project ID		ABB	Title: in-/outputs / entradas/salidas	analog / analógico	in generell / en general	3BHS2#####	=PU___	Page 72
Check.	2010-01-12 RePao	ABB: A-20#####	system / sistema	ABBCH ATBN						
©ABBCH	2010-01-12 16:14	OEM: ___						Language: EN ES	Form: A3	+PUCL	<71 >75
Rev. 0	2010-01-12 RePao	Std Name: OEM	Std Issue: Typ							

©Copyright 2005 ABB. All rights reserved. We reserve all rights in this document and in the information contained therein. Reproduction, use or disclosure to third parties without express authority is strictly forbidden.

-75D1
DC551-CS31
vA/cAf

DC551

1.0	R1	PWR	I0	DIr_LowerArchGuard	C8	DIr_Stop_Loop_PUCR	C16	DOr_P1_InkRoller_ON
1.1	R2	CS31	I1	DIr_P2_InchClutch	C9	DIr_P4_InchClutch	C17	DOr_P2_InkRoller_ON
1.2	B1	S-ERR	I2	DIr_UpperArchGuard	C10	DIr_VertClutch_Eng	C18	DOr_P3_InkRoller_ON
1.3	B2	I/O-Bus	I3	DIr_InchForw_Loop_PUCL	C11	DIr_VertClutch_Diseng	C19	DOr_P4_InkRoller_ON
1.4	FE		I4	DIr_InchRev_Loop_PUCL	C12	DIr_Estop_OK	C20	DOr_Compensation_Estop
1.5	B1	ADDR x10	I5	DIr_Stop_Loop_PUCL	C13	DIr_UpperEstop	C21	DOr_0V_Enable_Lamps_PUCL
1.6	B2	0	I6	DIr_InchForw_Loop_PUCR	C14	DOr_P2_InchEnable	C22	DOr_0V_Enable_Lamps_PUCR
1.7	FE		I7	DIr_InchRev_Loop_PUCR	C15	DOr_P4_InchEnable	C23	
1.8	UP	ADDR x1	2.8	UP	3.8	UP	4.8	UP
1.9	ZP	8	2.9	ZP	3.9	ZP	4.9	ZP
CH-ERR1			CH-ERR2		CH-ERR3		CH-ERR4	

SysB1 UP 24VDC 200W

CS31 8DI 16DC
Input 24VDC
Output 24VDC 0.5A

CS31-bus page 51/52
CS31-bus pagina 51/52

1.0	2.0 /86.H8	3.0 /238.H15	4.0 /175.B4
1.1	2.1 /224.F15	3.1	4.1 /275.B4
1.2	2.2 /86.H25	3.2 /81.H7	4.2
1.3	2.3 /138.H3	3.3 /81.H13	4.3
1.4	2.4 /138.H9	3.4 /99.G13	4.4 /95.B28
1.5	2.5 /138.H15	3.5 /99.G30	4.5 /138.B23
1.6	2.6 /238.H3	3.6 /224.B12	4.6 /238.B23
1.7	2.7 /238.H9	3.7	4.7
1.8 UP	2.8 UP	3.8 UP	4.8 UP
1.9 ZP	2.9 ZP	3.9 ZP	4.9 ZP

206.H4 24VDC_PU_B -X60 52P 52P
206.H5 0VDC_PU_B -X60 52M 52M

24VDC_PU_B 76.G1
0VDC_PU_B 76.G1

-75D1.1

TU552-CS31
vA/cAf

-X63 58P
-X63 58M

0VDC_P2/224.C9

Issue	2008-10-29 TK	XYZ Project ID	ABB ATBN	Title: AC500 CS31-BUS	coupler acoplador	safety circuit circuito de seguridad	3BHS2#####
Check.	2010-01-12 RePao	ABB: A-20#####					=PU___
©ABBCH	2010-01-12 16:14	OEM: ___ system sistema					Page 75
Rev. 0	2010-01-12 RePao	Std Name: OEM	Std Issue: Typ			Language: EN ES	Form: A3
							+PUCR
							<72 >76

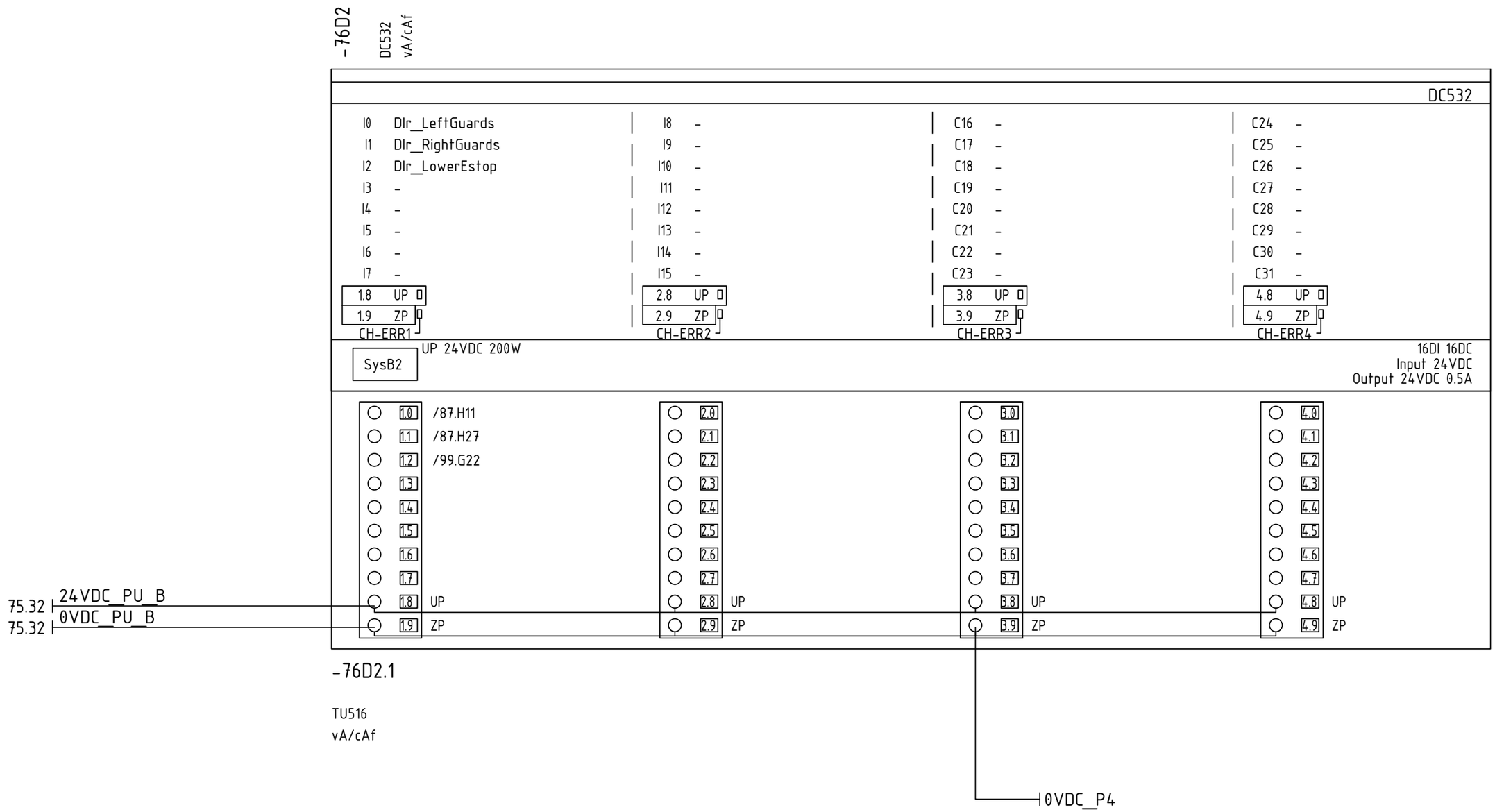

©Copyright 2005 ABB. All rights reserved. We reserve all rights in this document and in the information contained therein. Reproduction, use or disclosure to third parties without express authority is strictly forbidden.

Issue	2008-11-11 TK	XYZ Project ID	ABBCH ATBN	Title: in-/outputs digital safety circuit	3BHS2#####	=PU___	Page 76
Check.	2010-01-12 RePao	ABB: A-20##### system		entradas/salidas digital circuito de seguridad	Language: EN ES	Form: A3	+PUCR
©ABBCH	2010-01-12 16:14	OEM: ___ sistema					<75 >77
Rev. 0	2010-01-12 RePao	Std Name: OEM Std Issue: Typ					

©Copyright 2005 ABB. All rights reserved. We reserve all rights in this document and in the information contained therein. Reproduction, use or disclosure to third parties without express authority is strictly forbidden.

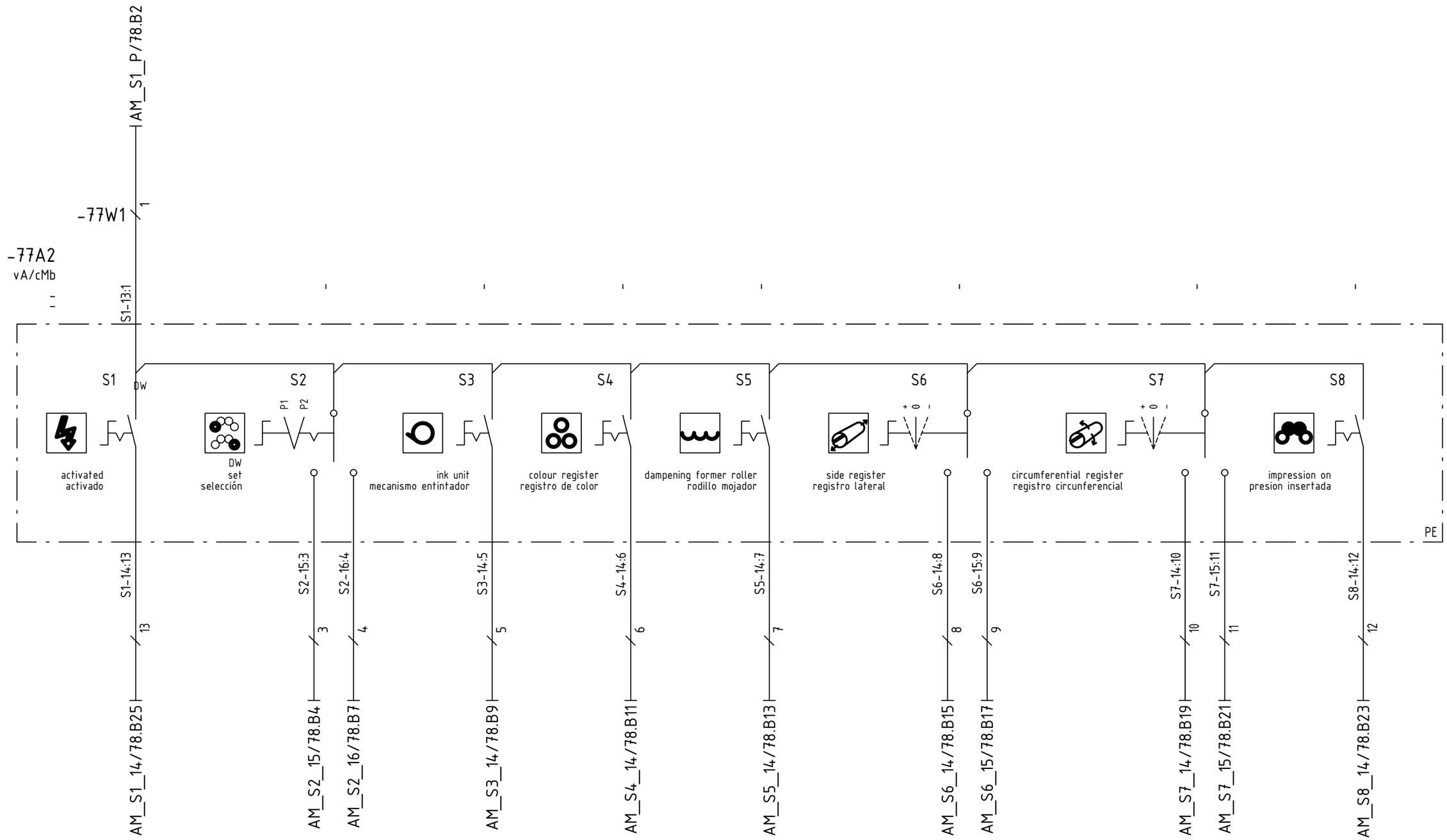

Issue	2008-11-06 TK	XYZ Project ID	ABBCH ATBN	Title: control station / panel de mando — mobile command panel / mando portatil	3BHS2#####
Check.	2010-01-12 RePao	ABB: A-20#####			=PU___
©ABBCH	2010-01-12 16:14	OEM: ___ system / sistema			Page 77
Rev. 0	2010-01-12 RePao	Std Name: OEM Std Issue: Typ		Language: EN ES Form: A3	+PUCL <76 >78

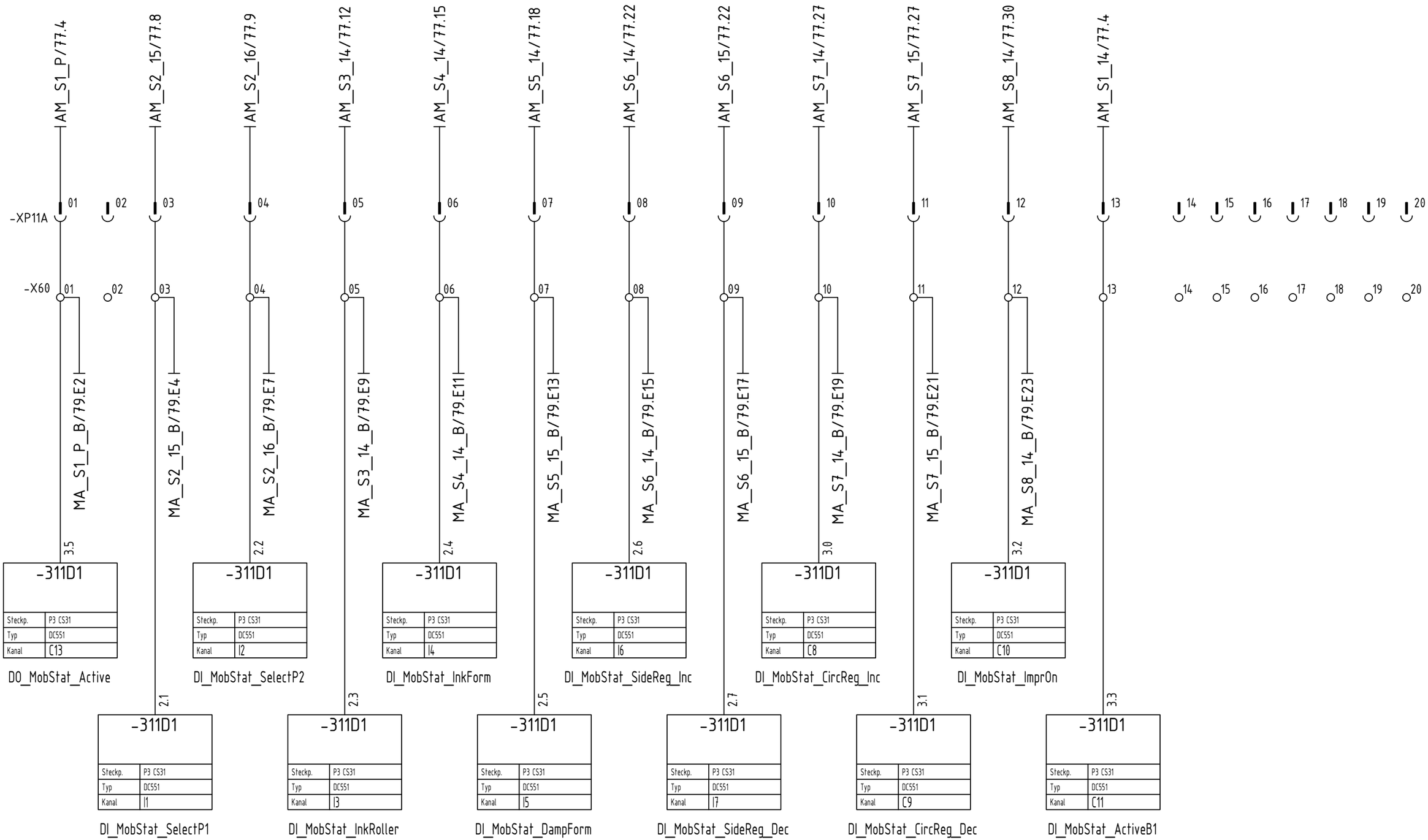

©Copyright 2005 ABB. All rights reserved. We reserve all rights in this document and in the information contained therein. Reproduction, use or disclosure to third parties without express authority is strictly forbidden.

Issue	2008-11-11 TK	XYZ Project ID	ABBCH ATBN	Title: control station / panel de mando	mobile command panel / mando portatil	plug / clavija XP11A	3BHS2#####	=PU___	Page 78
Check.	2010-01-12 RePao	ABB: A-20#####					Language: EN ES	Form: A3	+PUCL	<77 >79
©ABBCH	2010-01-12 16:14	OEM: ___ system / sistema							
Rev. 0	2010-01-12 RePao	Std Name: OEM	Std Issue: Typ						

©Copyright 2005 ABB. All rights reserved. We reserve all rights in this document and in the information contained therein. Reproduction, use or disclosure to third parties without express authority is strictly forbidden.

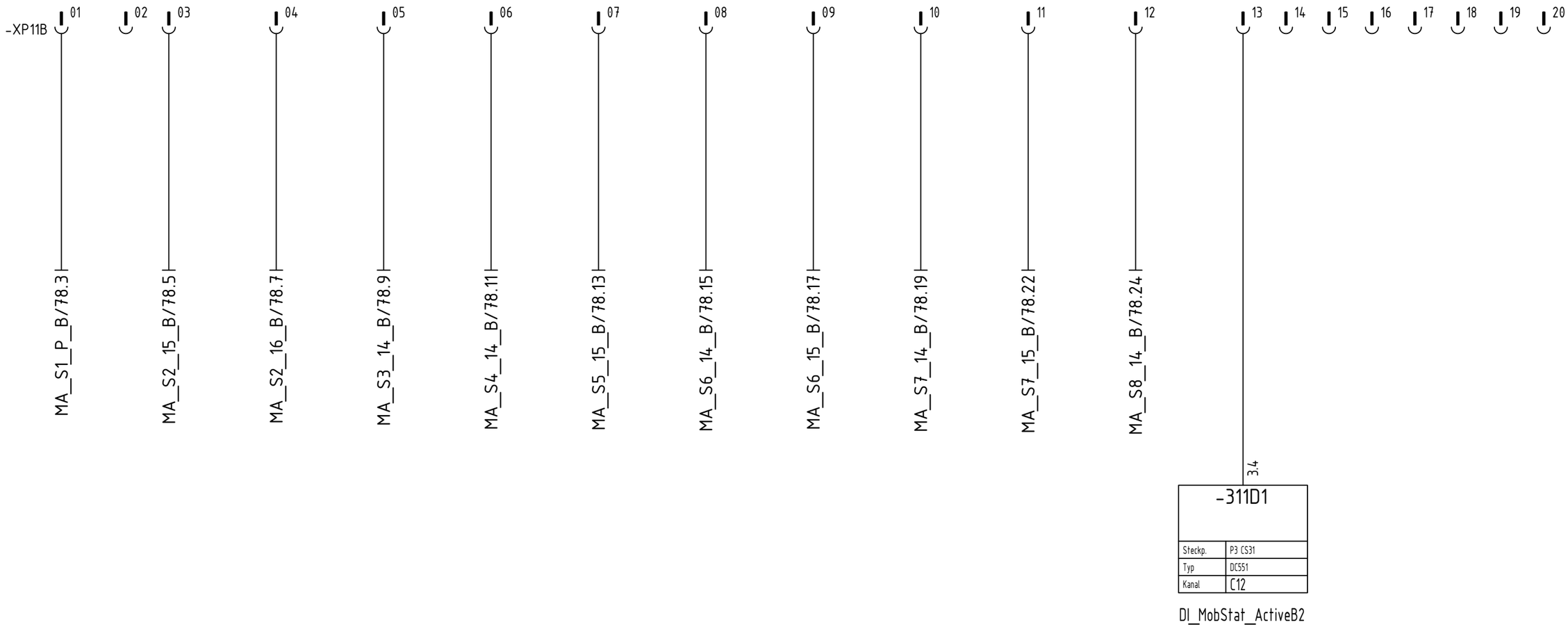

Issue	2008-11-12 TK	XYZ Project ID	ABBCH ATBN	Title: control station / panel de mando	mobile command panel / mando portatil	plug / clavija XP11B	3BHS2#####
Check.	2010-01-12 RePao	ABB: A-20#####					=PU___
©ABBCH	2010-01-12 16:14	OEM: ___ system / sistema					Page 79
Rev. 0	2010-01-12 RePao	Std Name: OEM	Std Issue: Typ			Language: EN ES	Form: A3
							+PUCL
							<78 >81

©Copyright 2005 ABB. All rights reserved. We reserve all rights in this document and in the information contained therein. Reproduction, use or disclosure to third parties without express authority is strictly forbidden.

PU___B: C5115A

PU___A: C15

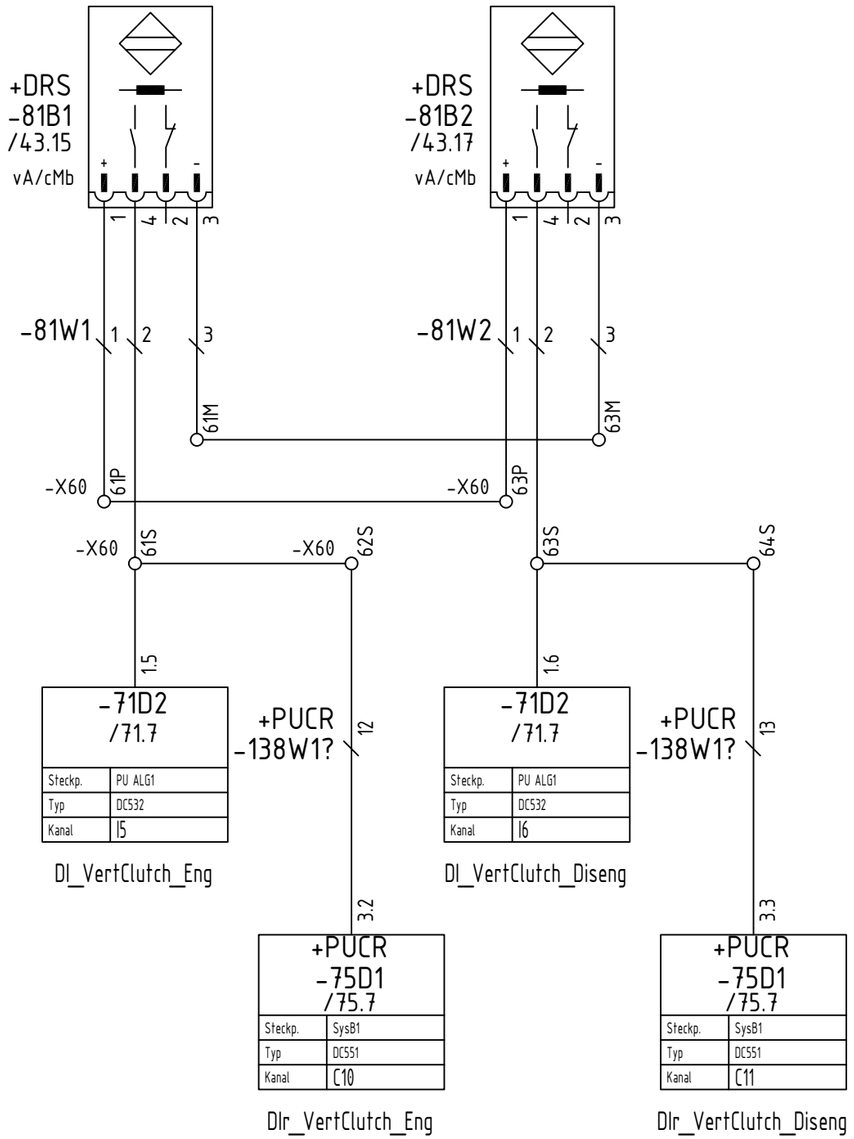

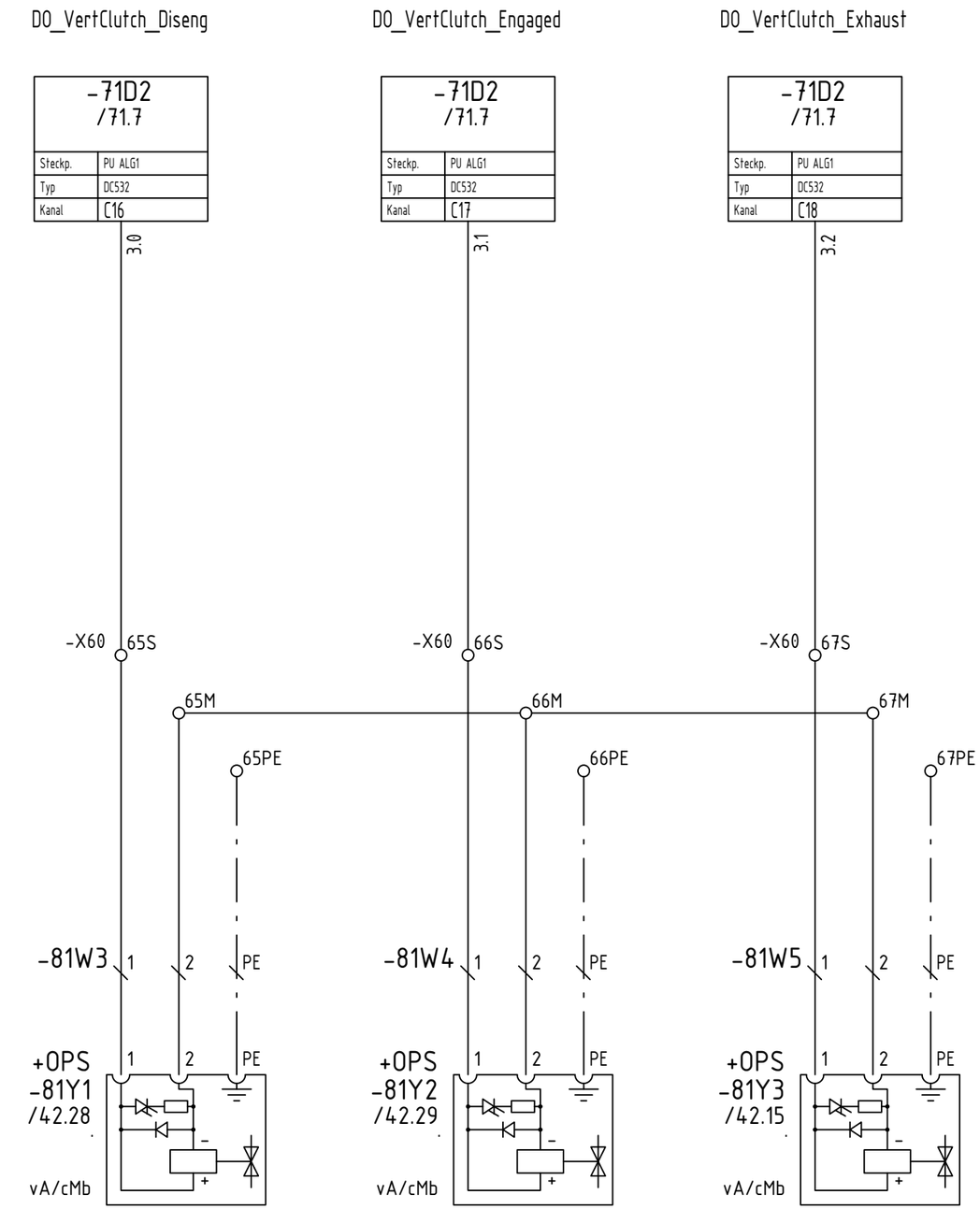

PU___B: C5115A

PU___A: C15

Issue	2008-10-15 TK	XYZ Project ID	ABBCH ATBN	Title: vertical clutch vertical embrague	3BHS2#####	=PU___	Page 81
Check.	2010-01-12 RePao	ABB: A-20#####			Language: EN ES	Form: A3	+PUCL <79 >85
©ABBCH	2010-01-12 16:14	OEM: ___ system sistema					
Rev. 0	2010-01-12 RePao	Std Name: OEM	Std Issue: Typ				

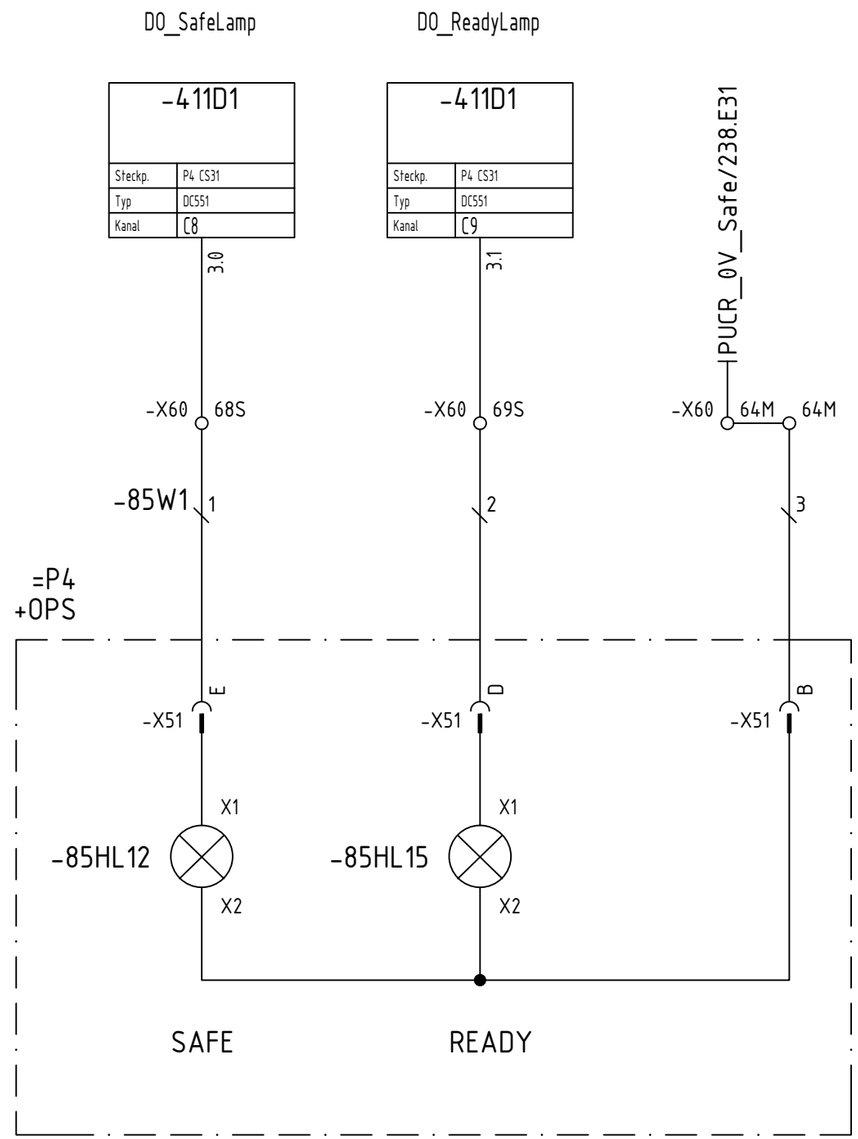

©Copyright 2005 ABB. All rights reserved. We reserve all rights in this document and in the information contained therein. Reproduction, use or disclosure to third parties without express authority is strictly forbidden.

Issue	2008-11-12 TK	XYZ Project ID	ABB ATBN	Title: Safe/Ready	signal lamp indicador lum.
Check.	2010-01-12 RePao	ABB: A-20#####			
©ABBCH	2010-01-12 16:14	OEM: ___ system sistema			
Rev. 0	2010-01-12 RePao	Std Name: OEM	Std Issue: Typ		

3BHS2#####	=PU___	Page 85	
Language: EN ES	Form: A3	+PUCR	<81 >86

©Copyright 2005 ABB. All rights reserved. We reserve all rights in this document and in the information contained therein. Reproduction, use or disclosure to third parties without express authority is strictly forbidden.

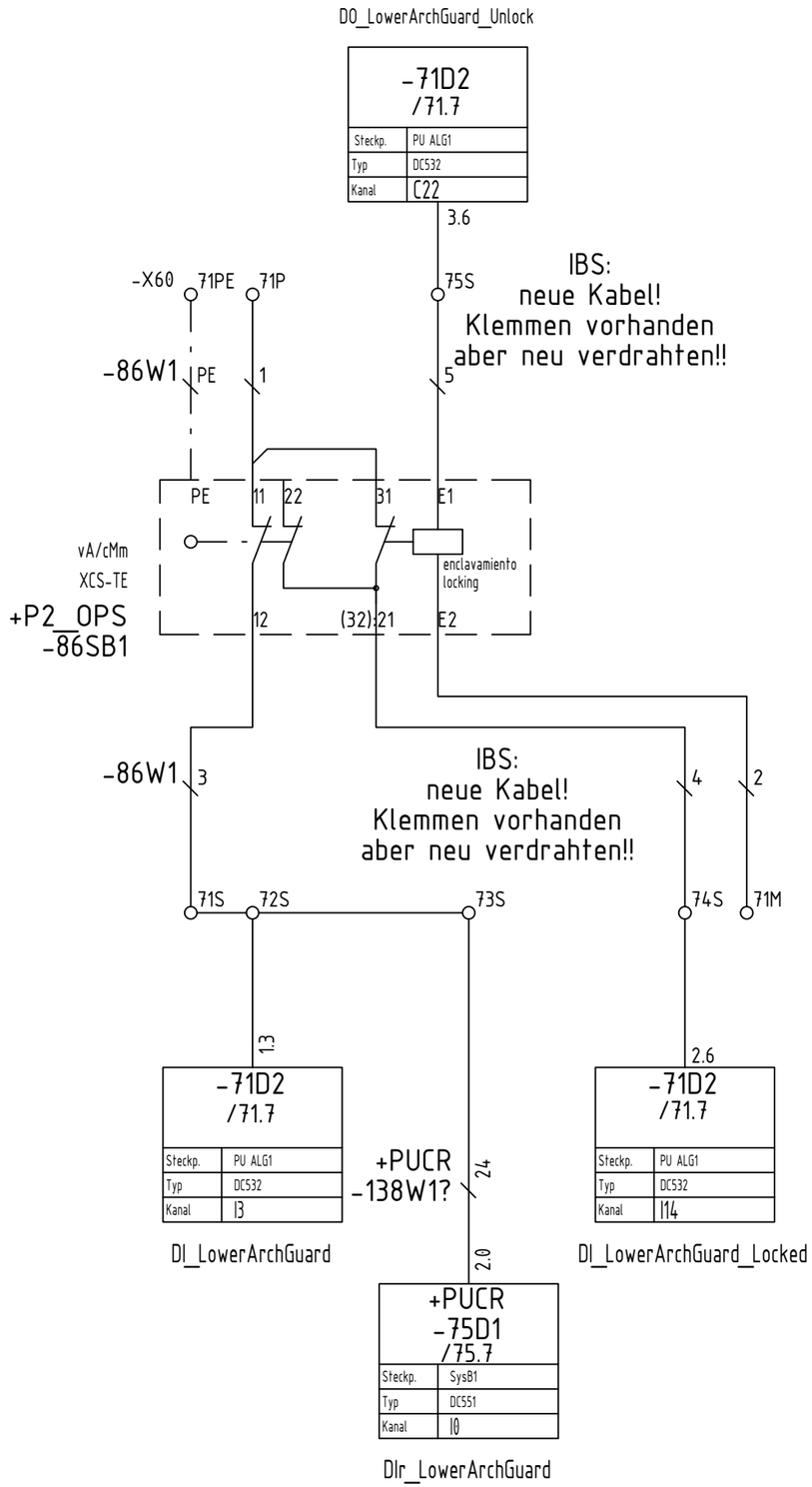

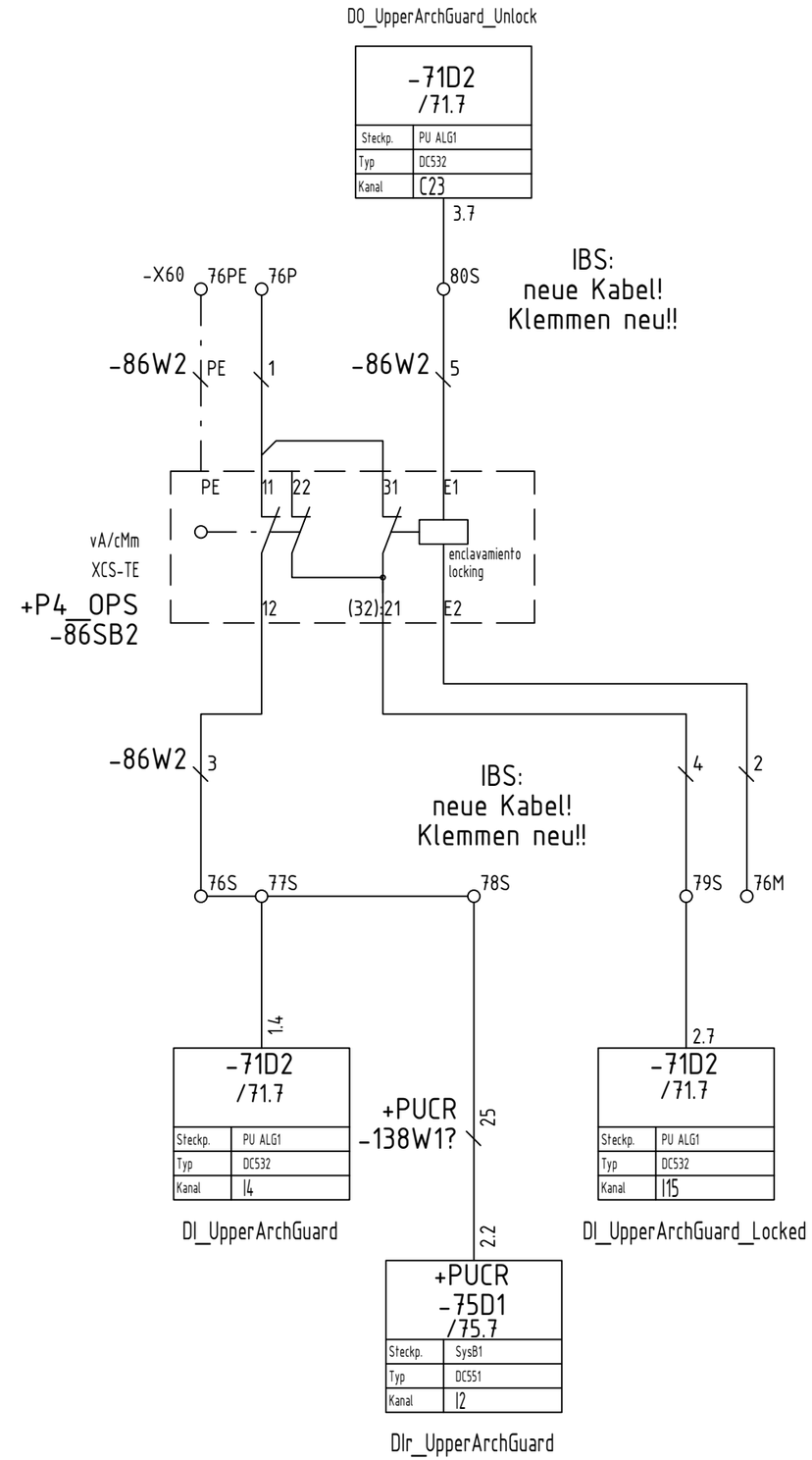

Issue	2009-08-13 mr	XYZ Project ID	ABBCH ATBN	Title: guard monitoring / monitoreo de protección — arch guard / arco protector	3BHS2#####
Check.	2010-01-12 RePao	ABB: A-20#####			=PU___
©ABBCH	2010-01-12 16:14	OEM: ___ system / sistema			Page 86
Rev. 0	2010-01-12 RePao	Std Name: OEM Std Issue: Typ		Language: EN ES Form: A3	+PUCL <85 >87

©Copyright 2005 ABB. All rights reserved. We reserve all rights in this document and in the information contained therein. Reproduction, use or disclosure to third parties without express authority is strictly forbidden.

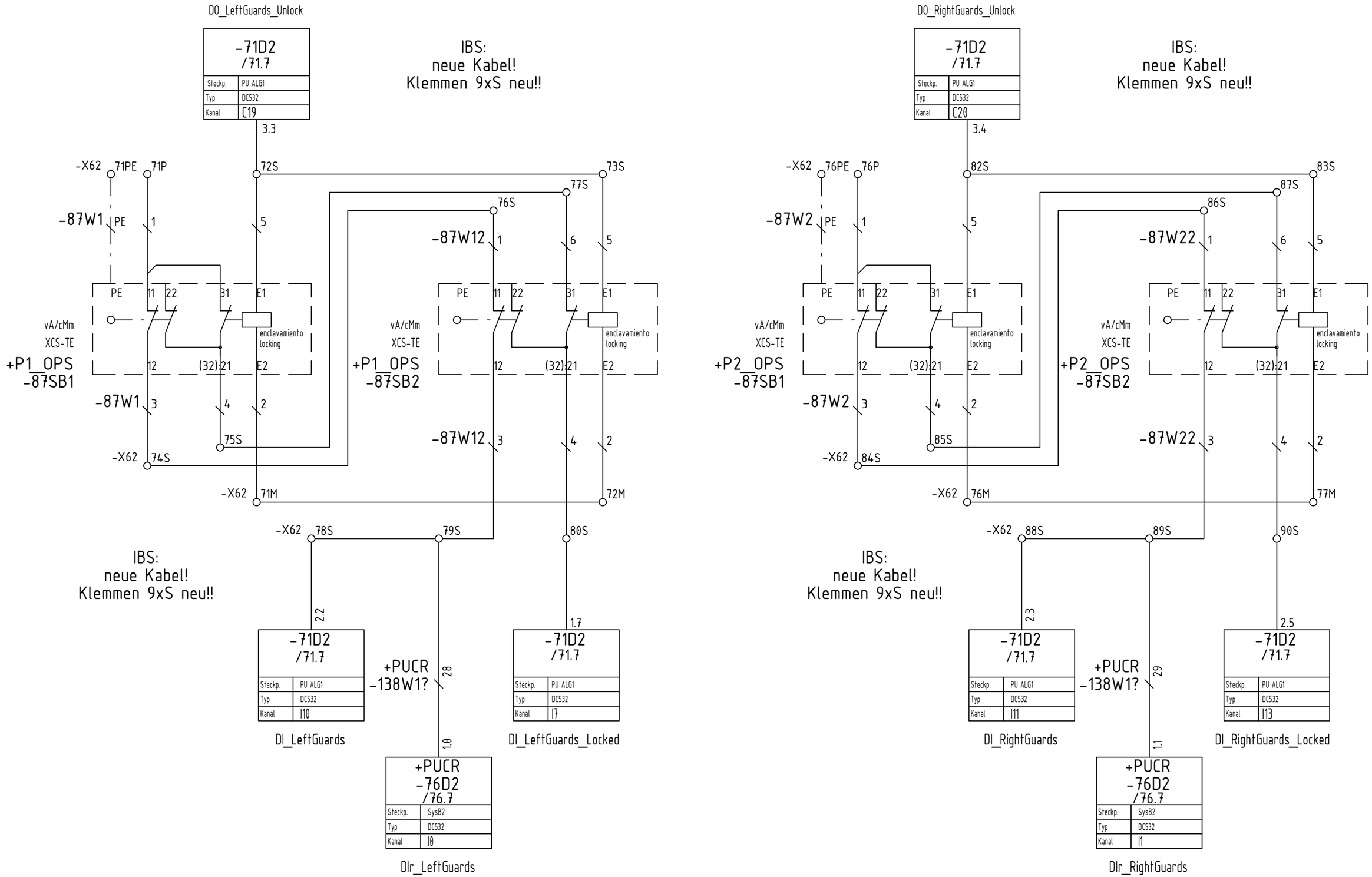

Issue	2009-08-13 mr	XYZ Project ID		Title: guard monitoring / monitoreo de protección — left / izquierda — right / derecha	3BHS2#####	=PU___	Page 87
Check.	2010-01-12 RePao	ABB: A-20#####	system / sistema				
©ABBCH	2010-01-12 16:14	OEM: ___		ABBCH ATBN	Language: EN / ES	Form: A3	+PUCL
Rev. 0	2010-01-12 RePao	Std Name: OEM	Std Issue: Typ				<86 / >90

©Copyright 2005 ABB. All rights reserved. We reserve all rights in this document and in the information contained therein. Reproduction, use or disclosure to third parties without express authority is strictly forbidden.

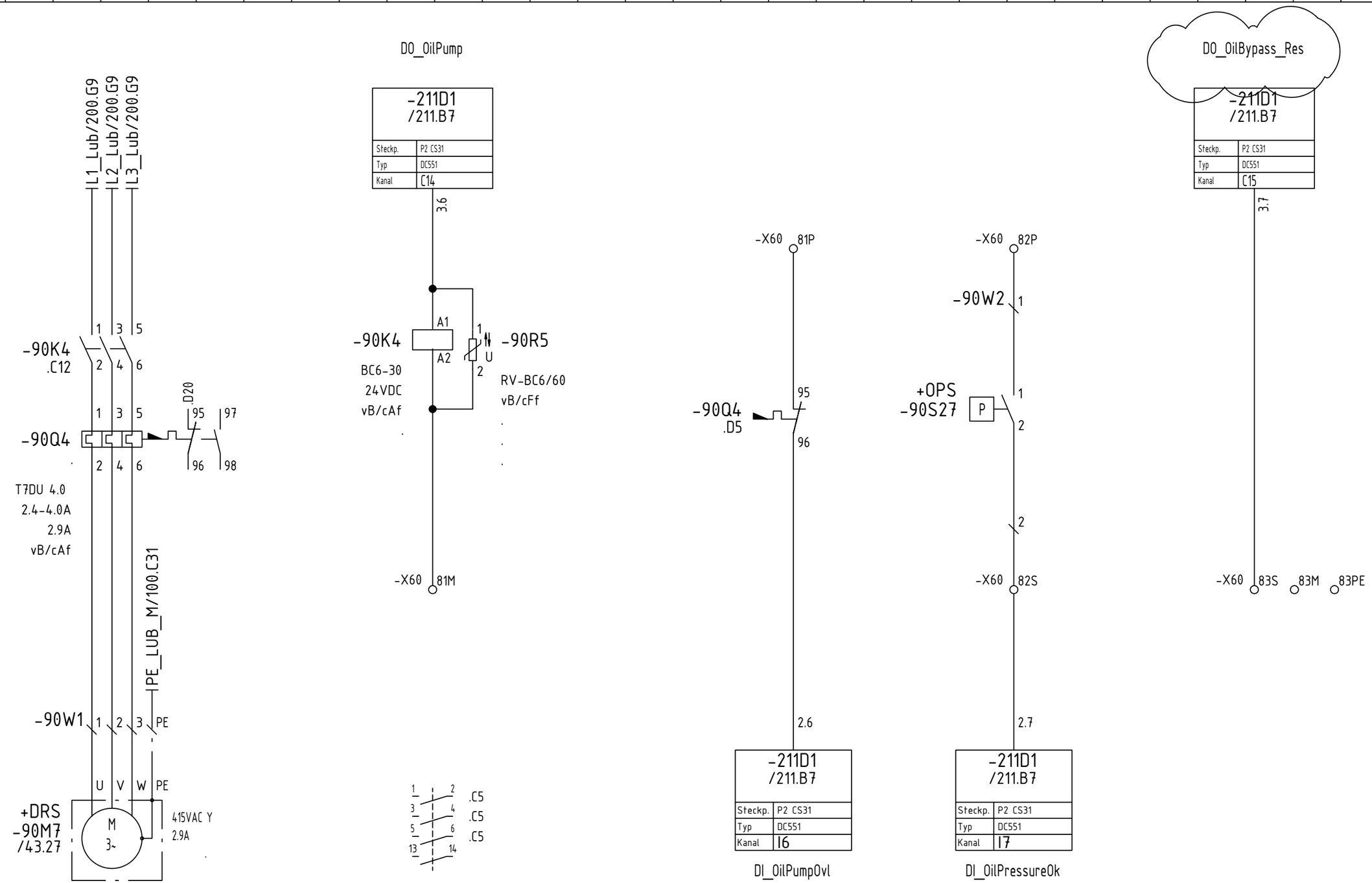

Issue	2008-10-15 TK	XYZ Project ID	ABB	Title: lubrication / lubricacion	3BHS2#####	=PU___	Page 90
Check.	2010-01-12 RePao	ABB: A-20##### system / OEM: ___ sistema	ABBCH ATBN		Language: EN ES	Form: A3	+PUCR
©ABBCH	2010-01-12 16:14						<87 >95
Rev. 0	2010-01-12 RePao	Std Name: OEM Std Issue: Typ					

©Copyright 2005 ABB. All rights reserved. We reserve all rights in this document and in the information contained therein. Reproduction, use or disclosure to third parties without express authority is strictly forbidden.

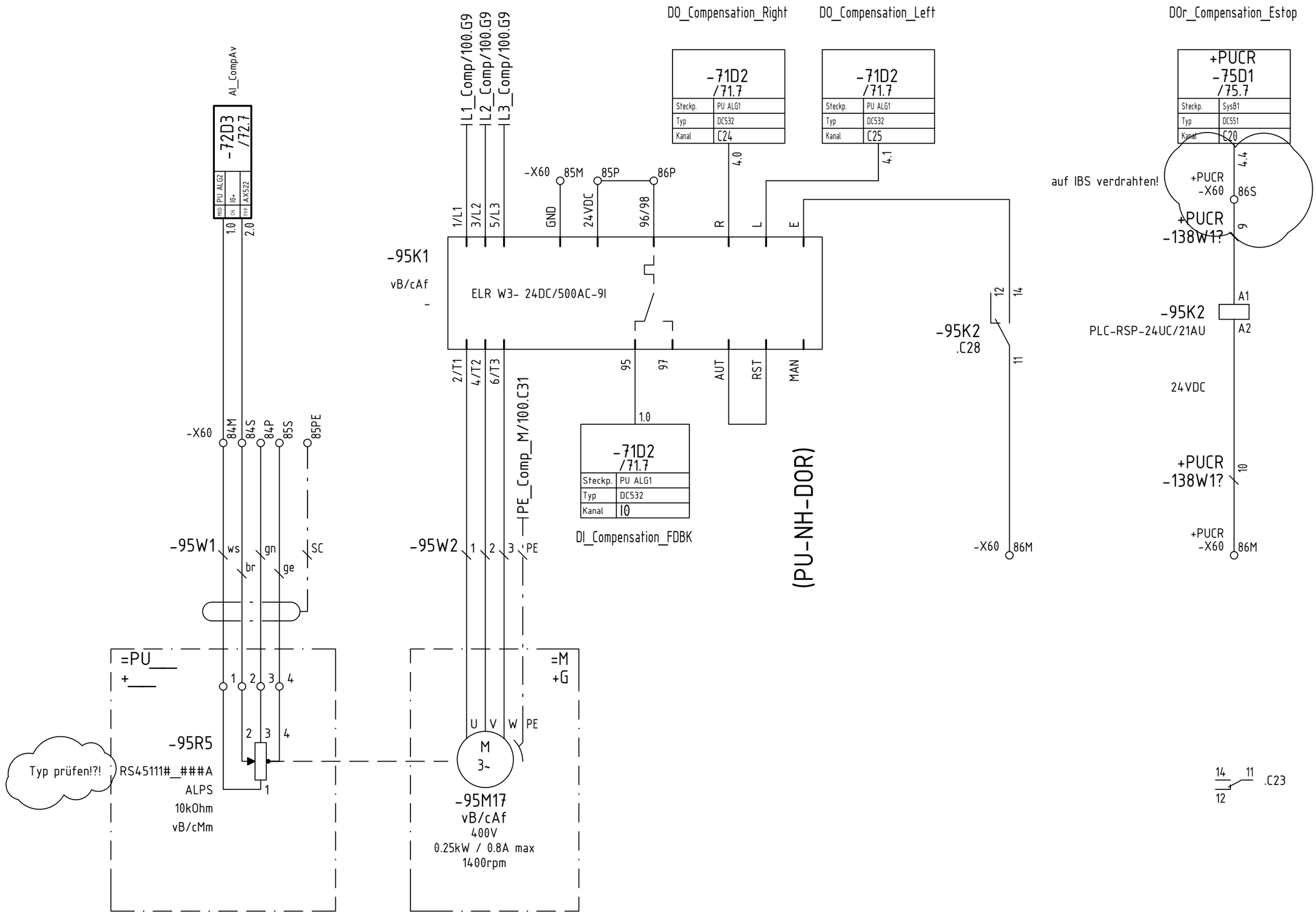

Issue	2008-10-15 TK	XYZ Project ID	ABB	Title: compensation Compensación	3BHS2#####	=PU___	Page 95
Check.	2010-01-12 RePao	ABB: A-20#####	ABBCH ATBN		Language: EN ES	Form: A3	+PUCL
©ABBCH	2010-01-12 16:14	OEM: ___ system sistema					<90 >98
Rev. 0	2010-01-12 RePao	Std Name: OEM Std Issue: Typ					

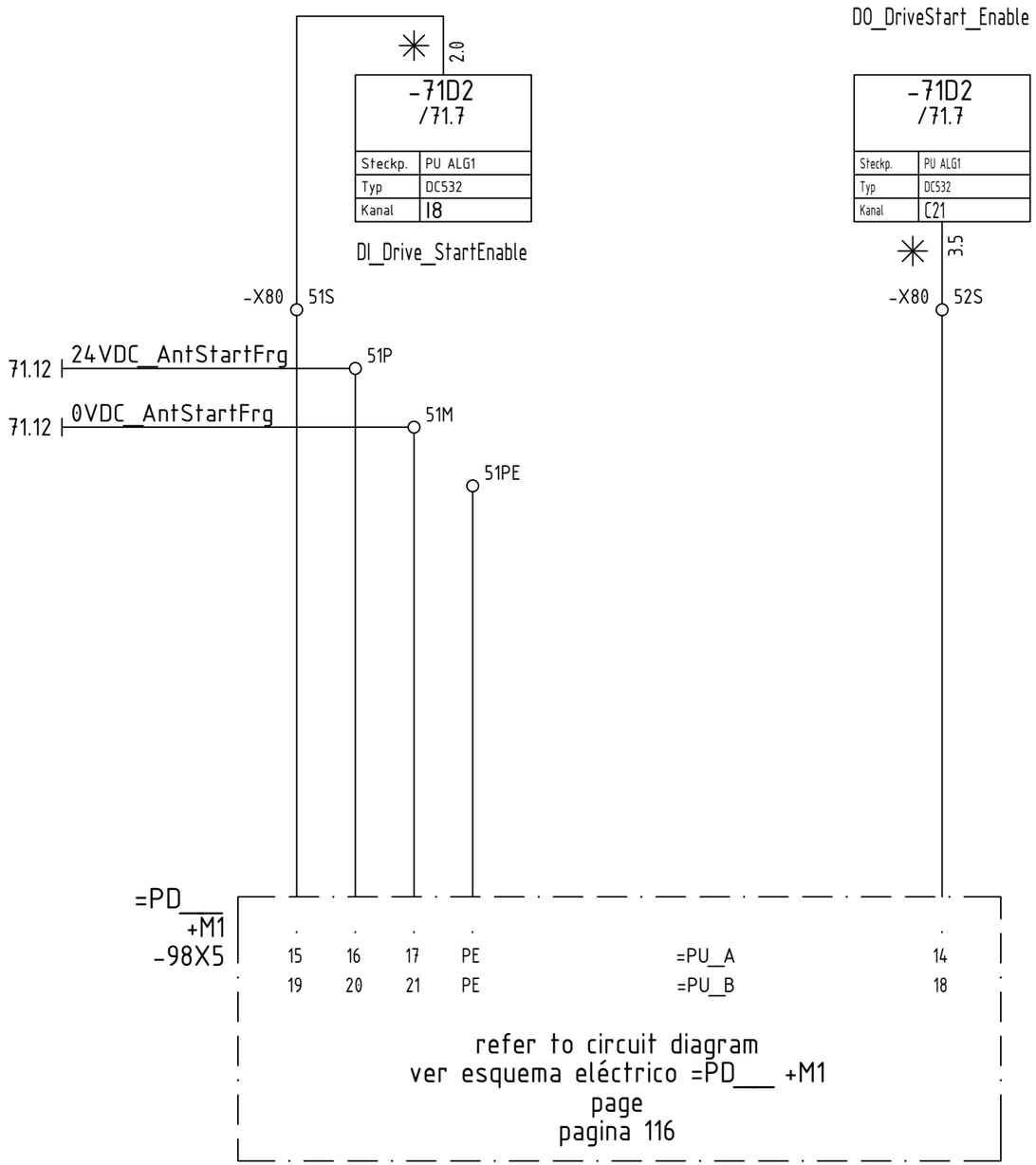

=PU_A control signals
señales de control

=PU_B redundancy channel
redundancia canal

©Copyright 2005 ABB. All rights reserved. We reserve all rights in this document and in the information contained therein. Reproduction, use or disclosure to third parties without express authority is strictly forbidden.

Issue	2009-01-09 mr	XYZ Project ID	ABBCH ATBN	Title: drive propulsión — enable start arranque desbloqueo	3BHS2#####
Check.	2010-01-12 RePao	ABB: A-20##### system sistema			=PU___
©ABBCH	2010-01-12 16:14	OEM: ___			Page 98
Rev. 0	2010-01-12 RePao	Std Name: OEM Std Issue: Typ		Language: EN ES Form: A3	+PUCL <95 >99

emergency stop / Desconexión de emergencia

refer to =N+NU / ver =N+NU

page 5x3 / pagina 5x3

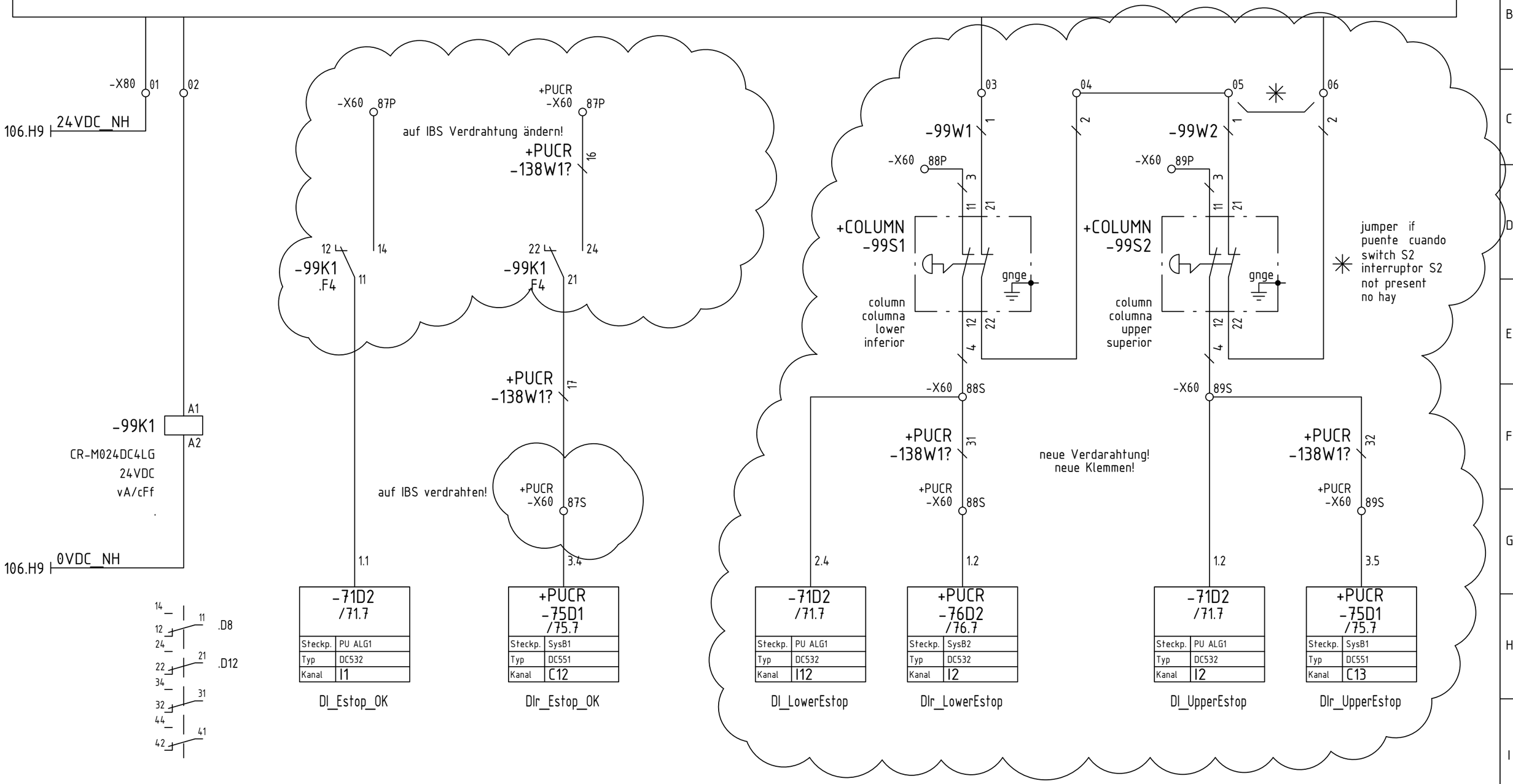

©Copyright 2005 ABB. All rights reserved. We reserve all rights in this document and in the information contained therein. Reproduction, use or disclosure to third parties without express authority is strictly forbidden.

Issue	2008-10-15 TK	XYZ Project ID	ABBCH ATBN	Title: emergency-stop / parada de emergencia — interface / interfaz	3BHS2#####
Check.	2010-01-12 RePao	ABB: A-20#####			=PU___
©ABBCH	2010-01-12 16:14	OEM: ___ system / sistema			Page 99
Rev. 0	2010-01-12 RePao	Std Name: OEM Std Issue: Typ		Language: EN ES Form: A3	+PUCL <98 >100

©Copyright 2005 ABB. All rights reserved. We reserve all rights in this document and in the information contained therein. Reproduction, use or disclosure to third parties without express authority is strictly forbidden.

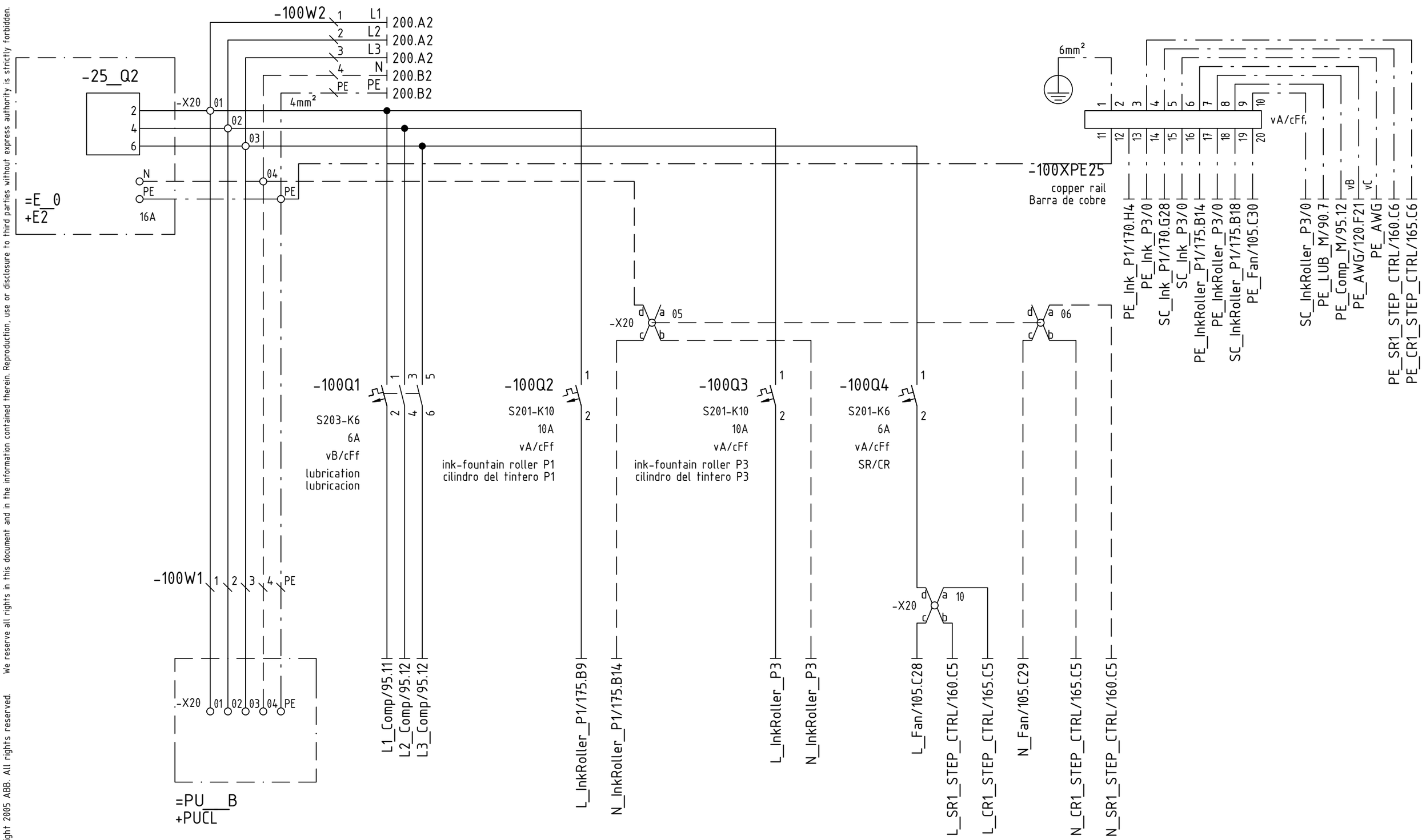

Issue	2008-10-15 TK	XYZ Project ID	ABB ATBN	Title: supply / fuente de alimentación	230VAC/400VAC
Check.	2010-01-12 RePao	ABB: A-20#####			
©ABBCH	2010-01-12 16:14	OEM: ___ system / sistema			
Rev. 0	2010-01-12 RePao	Std Name: OEM	Std Issue: Typ		

3BHS2#####	=PU___	Page 100	
Language: EN ES	Form: A3	+PUCL	<99 >105

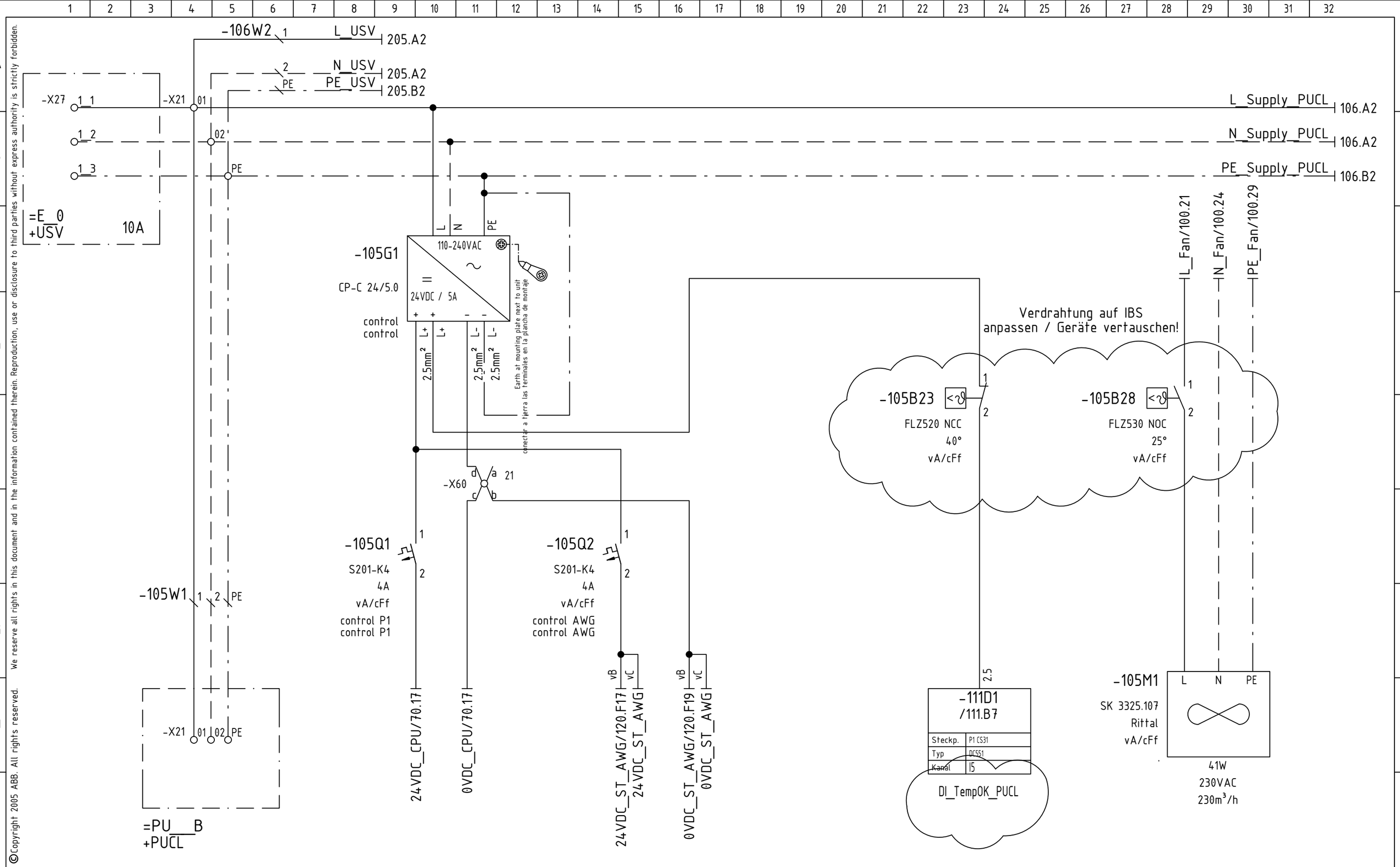

©Copyright 2005 ABB. All rights reserved. We reserve all rights in this document and in the information contained therein. Reproduction, use or disclosure to third parties without express authority is strictly forbidden.

Issue	2008-10-15 TK	XYZ Project ID	ABBCH ATBN	Title: supply Alimentación 24VDC control control	3BHS2#####
Check.	2010-01-12 RePao	ABB: A-20#####			=PU___
©ABBCH	2010-01-12 16:14	OEM: ___ system sistema			Page 105
Rev. 0	2010-01-12 RePao	Std Name: OEM Std Issue: Typ			Language: EN ES Form: A3
					+PUCL <100 >106

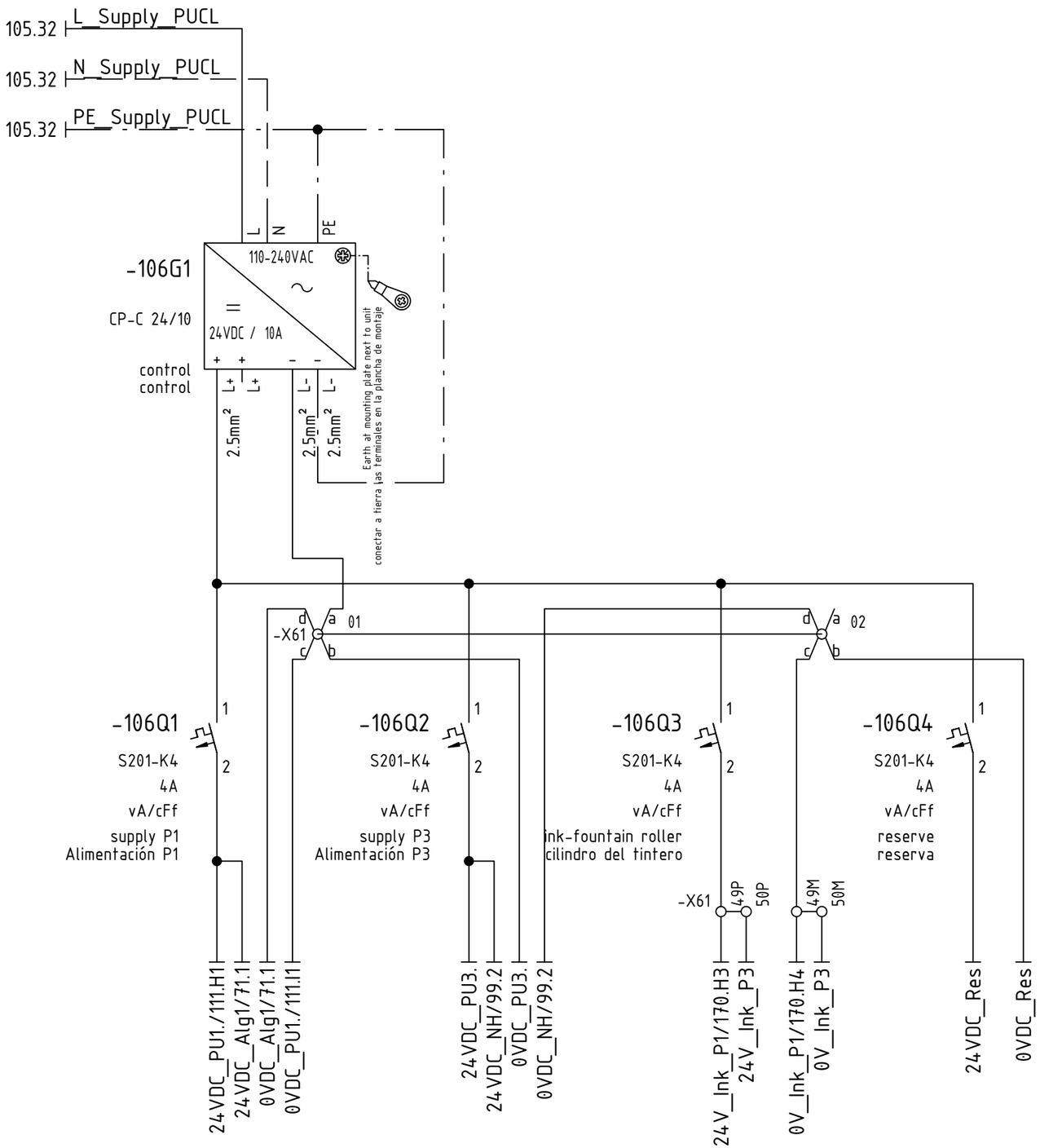

©Copyright 2005 ABB. All rights reserved. We reserve all rights in this document and in the information contained therein. Reproduction, use or disclosure to third parties without express authority is strictly forbidden.

Issue	2008-10-15 TK	XYZ Project ID		Title: supply Alimentación 24VDC power potencia	3BHS2##### =PU___ Page 106
Check.	2010-01-12 RePao	ABB: A-20#####	system sistema		
©ABBCH	2010-01-12 16:14	OEM: ___		ABBCH ATBN	Language: EN ES Form: A3 +PUCL <105 >111
Rev. 0	2010-01-12 RePao	Std Name: OEM	Std Issue: Typ		

©Copyright 2005 ABB. All rights reserved. We reserve all rights in this document and in the information contained therein. Reproduction, use or disclosure to third parties without express authority is strictly forbidden.

-111D1
DC551-CS31
vA/cAf

DC551

1.0	R1	PWR	I0	-	C8	-	C16 DI_P1P3_SideReg_PulseFC
1.1	R2	CS31	I1	-	C9	-	C17 DO_P1P3_SideReg_StepsFC
1.2	B1	S-ERR	I1	-	C10	-	C18 DI_P1P3_SideReg_NotErrFC
1.3	B2	I/O-Bus	I3	-	C11	-	C19 DO_P1P3_SideReg_Direction
1.4	FE		I4	-	C12	-	C20 DO_P1P3_SideReg_Fast
1.5	B1	ADDR x10	I5	DI_TempOK_PUCL	C13	-	C21 DO_P1P3_SideReg_Slow
1.6	B2	7	I6	-	C14	-	C22 DO_P1P3_SideReg_Shutdown
1.7	FE		I7	-	C15	-	C23 DO_P1P3_SideReg_24VdcAux
1.8	UP	ADDR x1	2.8	UP	3.8	UP	4.8 UP
1.9	ZP	0	2.9	ZP	3.9	ZP	4.9 ZP
CH-ERR1			CH-ERR2		CH-ERR3		CH-ERR4

P1 CS31

UP 24VDC 200W

CS31 8DI 16DC
Input 24VDC
Output 24VDC 0.5A

CS31-bus page 51/52
CS31-bus pagina 51/52

1.0		2.0		3.0		4.0	/160.C18
1.1		2.1		3.1		4.1	/160.C19
1.2		2.2		3.2		4.2	/160.C19
1.3		2.3		3.3		4.3	/160.C20
1.4		2.4		3.4		4.4	/160.C21
1.5		2.5	/105.23	3.5		4.5	/160.C22
1.6		2.6		3.6		4.6	/160.C23
1.7		2.7		3.7		4.7	/160.C24
1.8	UP	2.8	UP	3.8	UP	4.8	UP
1.9	ZP	2.9	ZP	3.9	ZP	4.9	ZP

-111D1.1

TU552-CS31
vA/cAf

SR1_ZP-GND/160.C24

106.4 24VDC_PU1. -X61 51P 51P
106.5 0VDC_PU1. -X61 51M 51M

24VDC_PU1/115.G2
0VDC_PU1/115.G2

Issue	2008-10-15 TK	XYZ Project ID		ABB ABBCH ATBN	Title: AC500 CS31-BUS	coupler acoplador	printing couple cuerpo de impresión 1	3BHS2#####	=PU___	Page 111
Check.	2010-01-12 RePao	ABB: A-20#####	system sistema							
©ABBCH	2010-01-12 16:14	OEM: ___						Language: EN ES	Form: A3	+PUCL	<106 >115
Rev. 0	2010-01-12 RePao	Std Name: OEM	Std Issue: Typ							

-115D2

DC532
vA/cAf

DC532

I0	DI_P1_InkRollerFb	I8	DI_P1_InkRollerManSel	C16	DO_P1_InkRoller	C24	DO_P1_InkRollerLamp
I1	-	I9	DI_P1_InkRollerAutoSel	C17	DO_StartUp_Alarm	C25	DO_P1_InkBladeLamp
I2	-	I10	DI_P1_InkBlade_OnCmd	C18	DO_A6_CrawlLamp	C26	DO_P1_InkBlade
I3	-	I11	-	C19	-	C27	-
I4	-	I12	-	C20	-	C28	-
I5	-	I13	DI_A1_InchForwCmd	C21	-	C29	-
I6	-	I14	DI_A1_InchRevCmd	C22	DO_A1_ReadyLamp	C30	DO_P1_SideRegSel
I7	-	I15	DI_A1_StopCmd	C23	DO_A1_SafeLamp	C31	DO_P1_CircRegSel
1.8	UP	2.8	UP	3.8	UP	4.8	UP
1.9	ZP	2.9	ZP	3.9	ZP	4.9	ZP
CH-ERR1		CH-ERR2		CH-ERR3		CH-ERR4	

P1 M1 UP 24VDC 200W

16DI 16DC
Input 24VDC
Output 24VDC 0.5A

1.0	/175.H22	2.0	/176.H4	3.0	/175.B21	4.0	/176.B9
1.1		2.1	/176.H7	3.1	/129.C4	4.1	/177.B7
1.2		2.2	/177.H6	3.2	/134.B19	4.2	/177.B16
1.3		2.3		3.3		4.3	
1.4		2.4		3.4		4.4	
1.5		2.5	/131.G21	3.5		4.5	
1.6		2.6	/131.G25	3.6	/131.B12	4.6	/161.B6
1.7		2.7	/131.G29	3.7	/131.B15	4.7	/166.B6
1.8	UP	2.8	UP	3.8	UP	4.8	UP
1.9	ZP	2.9	ZP	3.9	ZP	4.9	ZP

111.29 24VDC_PU1
111.29 0VDC_PU1

24VDC_PU1 116.G3
0VDC_PU1 116.G3

-115D2.1

TU516
vA/cAf

©Copyright 2005 ABB. All rights reserved. We reserve all rights in this document and in the information contained therein. Reproduction, use or disclosure to third parties without express authority is strictly forbidden.

Issue	2008-10-15 TK	XYZ Project ID		ABBCH ATBN	Title: in-/outputs digital printing couple	3BHS2#####	=PU___	Page 115
Check.	2010-01-12 RePao	ABB: A-20#####	system		entradas/salidas digital cuerpo de impresión 1			
©ABBCH	2010-01-12 16:14	OEM: ___	sistema			Language: EN ES	Form: A3	+PUCL <111 >116
Rev. 0	2010-01-12 RePao	Std Name: OEM	Std Issue: Typ					

-116D2

DC532
vA/cAf

DC532

I0	-	I8	-	C16	-	C24	DO_P1_Impr_DS
I1	-	I9	-	C17	-	C25	-
I2	DI_A6_CrawlCmd	I10	-	C18	DO_A6_ReadyLamp	C26	-
I3	DI_A6_WebbingUpSpeedCmd	I11	-	C19	DO_A6_SafeLamp	C27	-
I4	DI_A6_InchForwCmd	I12	-	C20	DO_P1_InkPickUp	C28	-
I5	DI_A6_InchRevCmd	I13	-	C21	DO_P1_WaterForm	C29	-
I6	DI_A6_StopCmd	I14	-	C22	DO_P1_InkForm	C30	-
I7	-	I15	-	C23	DO_P1_Impr_OS	C31	-
1.8	UP	2.8	UP	3.8	UP	4.8	UP
1.9	ZP	2.9	ZP	3.9	ZP	4.9	ZP
CH-ERR1		CH-ERR2		CH-ERR3		CH-ERR4	

P1 M2

UP 24VDC 200W

16DI 16DC
Input 24VDC
Output 24VDC 0.5A

1.0		2.0		3.0		4.0	/140.B29
1.1		2.1		3.1		4.1	
1.2	/134.G17	2.2		3.2	/134.B11	4.2	
1.3	/134.G7	2.3		3.3	/134.B14	4.3	
1.4	/134.G21	2.4		3.4	/140.B4	4.4	
1.5	/134.G24	2.5		3.5	/140.B9	4.5	
1.6	/134.G28	2.6		3.6	/140.B14	4.6	
1.7		2.7		3.7	/140.B24	4.7	
1.8	UP	2.8	UP	3.8	UP	4.8	UP
1.9	ZP	2.9	ZP	3.9	ZP	4.9	ZP

115.31 24VDC_PU1
115.31 0VDC_PU1

24VDC_PU1 118.G3
0VDC_PU1 118.G3

-116D2.1

TU516
vA/cAf

©Copyright 2005 ABB. All rights reserved. We reserve all rights in this document and in the information contained therein. Reproduction, use or disclosure to third parties without express authority is strictly forbidden.

Issue	2008-10-15 TK	XYZ Project ID		ABB ABBCH ATBN	Title: in-/outputs digital printing couple	3BHS2#####	=PU___	Page 116
Check.	2010-01-12 RePao	ABB: A-20#####	system		entradas/salidas digital cuerpo de impresión 1			
©ABBCH	2010-01-12 16:14	OEM: ___	sistema			Language: EN ES	Form: A3	+PUCL <115 >118
Rev. 0	2010-01-12 RePao	Std Name: OEM	Std Issue: Typ					

-118D2
DC523
vA/cAf

DC523

1.0	24V	C0	DO_P1_InkScrewMuxUp0	C8	DO_P1_InkScrewMuxDown0	C16	DO_P1_InkScrewMuxSel0
1.1	24V	C1	DO_P1_InkScrewMuxUp1	C9	DO_P1_InkScrewMuxDown1	C17	DO_P1_InkScrewMuxSel1
1.2	24V	C2	DO_P1_InkScrewMuxUp2	C10	DO_P1_InkScrewMuxDown2	C18	DO_P1_InkScrewMuxSel2
1.3	24V	C3	DO_P1_InkScrewMuxUp3	C11	DO_P1_InkScrewMuxDown3	C19	DO_P1_InkScrewMuxSel3
1.4	0V	C4	DO_P1_InkScrewMuxUp4	C12	DO_P1_InkScrewMuxDown4	C20	DO_P1_InkScrewMuxSel4
1.5	0V	C5	DO_P1_InkScrewMuxUp5	C13	DO_P1_InkScrewMuxDown5	C21	DO_P1_InkScrewMuxSel5
1.6	0V	C6	DO_P1_InkScrewMuxUp6	C14	DO_P1_InkScrewMuxDown6	C22	DO_P1_InkScrewMuxSel6
1.7	0V	C7	DO_P1_InkScrewMuxUp7	C15	DO_P1_InkScrewMuxDown7	C23	DO_P1_InkScrewMuxSel7
1.8	UP	2.8	UP	3.8	UP	4.8	UP
1.9	ZP	2.9	ZP	3.9	ZP	4.9	ZP
CH-ERR1		CH-ERR2		CH-ERR3		CH-ERR4	

P1 M3

UP 24VDC 300W

24DC
Input 24VDC
Output 24VDC 0.5A

1.0		2.0	/170.C3	3.0	/170.C4	4.0	/170.C21
1.1		2.1	/170.C5	3.1	/170.C6	4.1	/170.C22
1.2		2.2	/170.C7	3.2	/170.C7	4.2	/170.C22
1.3		2.3	/170.C8	3.3	/170.C9	4.3	/170.C23
1.4		2.4	/170.C10	3.4	/170.C11	4.4	/170.C24
1.5		2.5	/170.C12	3.5	/170.C12	4.5	/170.C25
1.6		2.6	/170.C13	3.6	/170.C14	4.6	/170.C26
1.7		2.7	/170.C15	3.7	/170.C16	4.7	/170.C27
1.8	UP	2.8	UP	3.8	UP	4.8	UP
1.9	ZP	2.9	ZP	3.9	ZP	4.9	ZP

116.31 24VDC_PU1
116.31 0VDC_PU1

24VDC_PU1 119.G3
0VDC_PU1 119.G3

-118D2.1

TU516
vA/cAf

©Copyright 2005 ABB. All rights reserved. We reserve all rights in this document and in the information contained therein. Reproduction, use or disclosure to third parties without express authority is strictly forbidden.

Issue	2008-10-15 TK	XYZ Project ID		ABBCH ATBN	Title: in-/outputs digital ink unit	3BHS2#####	=PU___	Page 118
Check.	2010-01-12 RePao	ABB: A-20#####	system		entradas/salidas digital mecanismo entintador 1			
©ABBCH	2010-01-12 16:14	OEM: ___	sistema			Language: EN ES	Form: A3	+PUCL <116 >119
Rev. 0	2010-01-12 RePao	Std Name: OEM	Std Issue: Typ					

-119D3
AX522
vA/cAf

AX522

I0-	-	I0+	AI_P1_InkscrewMuxAv0	O0-	-	O0+	AO_P1_InkRollerSpeedSv
I1-	-	I1+	AI_P1_InkscrewMuxAv1	O1-	-	O1+	-
I2-	-	I2+	AI_P1_InkscrewMuxAv2	O2-	-	O2+	-
I3-	-	I3+	AI_P1_InkscrewMuxAv3	O3-	-	O3+	-
I4-	-	I4+	AI_P1_InkscrewMuxAv4	O4-	-	O4+	-
I5-	-	I5+	AI_P1_InkscrewMuxAv5	O5-	-	O5+	-
I6-	-	I6+	AI_P1_InkscrewMuxAv6	O6-	-	O6+	-
I7-	-	I7+	AI_P1_InkscrewMuxAv7	O7-	-	O7+	-
1.8	UP	2.8	UP	3.8	UP	4.8	UP
1.9	ZP	2.9	ZP	3.9	ZP	4.9	ZP
		CH-ERR2				CH-ERR4	

P1 M4

UP 24VDC 5W

8AI 8AO
Analog Input
Analog Output

1.0	/170.G20	2.0	/170.G20	3.0	/175.B17	4.0	/175.B17
1.1	/170.G21	2.1	/170.G21	3.1		4.1	
1.2	/170.G22	2.2	/170.G22	3.2		4.2	
1.3	/170.G23	2.3	/170.G23	3.3		4.3	
1.4	/170.G24	2.4	/170.G24	3.4		4.4	
1.5	/170.G24	2.5	/170.G24	3.5		4.5	
1.6	/170.G25	2.6	/170.G25	3.6		4.6	
1.7	/170.G26	2.7	/170.G26	3.7		4.7	
1.8	UP	2.8	UP	3.8	UP	4.8	UP
1.9	ZP	2.9	ZP	3.9	ZP	4.9	ZP

118.31 24VDC_PU1
118.31 0VDC_PU1

-119D3.1

TU516
vA/cAf

©Copyright 2005 ABB. All rights reserved. We reserve all rights in this document and in the information contained therein. Reproduction, use or disclosure to third parties without express authority is strictly forbidden.

Issue	2008-10-15 TK	XYZ Project ID	ABBCH ATBN	Title: in-/outputs entradas/salidas	analog analógico	ink unit mecanismo entintador 1	3BHS2#####	=PU___	Page 119
Check.	2010-01-12 RePao	ABB: A-20##### system sistema							
©ABBCH	2010-01-12 16:14	OEM: ___					Language: EN ES	Form: A3	+PUCL
Rev. 0	2010-01-12 RePao	Std Name: OEM	Std Issue: Typ						<118 >120

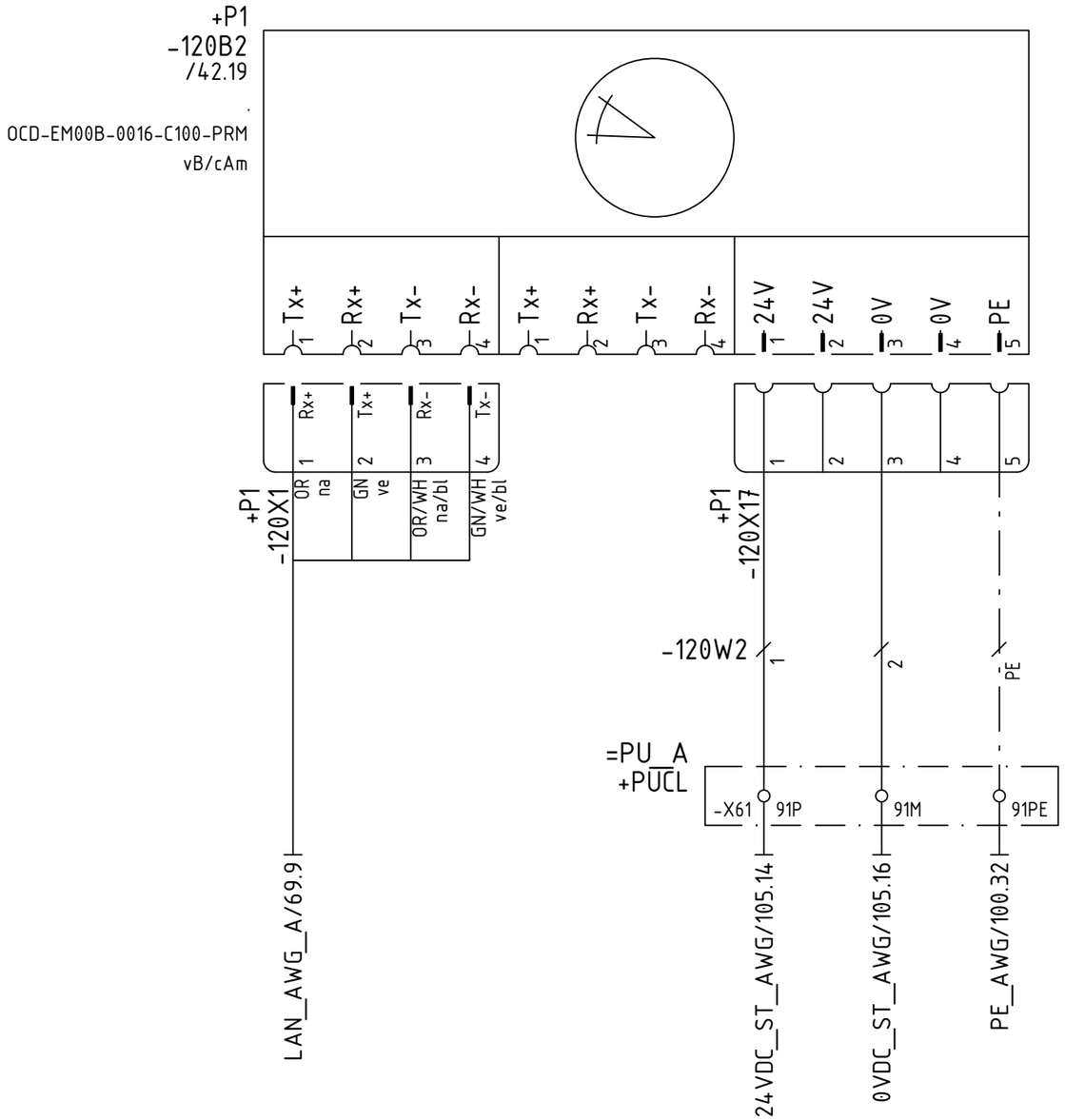

©Copyright 2005 ABB. All rights reserved. We reserve all rights in this document and in the information contained therein. Reproduction, use or disclosure to third parties without express authority is strictly forbidden.

Issue	2008-10-28 TK	XYZ Project ID	ABBCH ATBN	Title: position server Encoder de valor absoluto	3BHS2#####
Check.	2010-01-12 RePao	ABB: A-20##### system			=PU___
©ABBCH	2010-01-12 16:14	OEM: ___ sistema			Page 120
Rev. 0	2010-01-12 RePao	Std Name: OEM Std Issue: Typ		Language: EN ES Form: A3	+PUCL <119 >129

DO_StartUp_Alarm

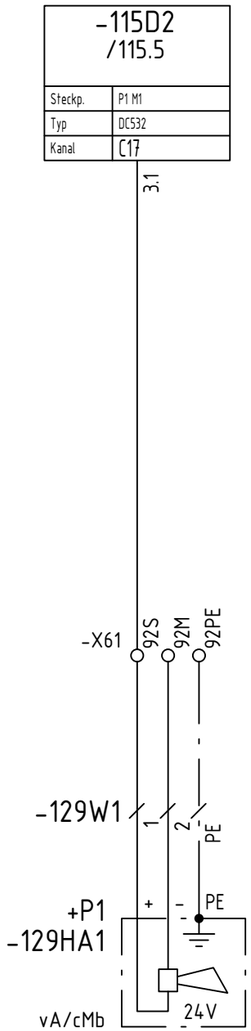

©Copyright 2005 ABB. All rights reserved. We reserve all rights in this document and in the information contained therein. Reproduction, use or disclosure to third parties without express authority is strictly forbidden.

Issue	2008-10-15 TK	XYZ Project ID	ABBCH ATBN	Title: start-up warning advertencia de puesta#en marcha	3BHS2#####
Check.	2010-01-12 RePao	ABB: A-20##### OEM: ___ system sistema			Language: EN ES / Form: A3
©ABBCH	2010-01-12 16:14				=PU___ / +PUCL
Rev. 0	2010-01-12 RePao	Std Name: OEM / Std Issue: Typ			Page 129 <120 >131

©Copyright 2005 ABB. All rights reserved. We reserve all rights in this document and in the information contained therein. Reproduction, use or disclosure to third parties without express authority is strictly forbidden.

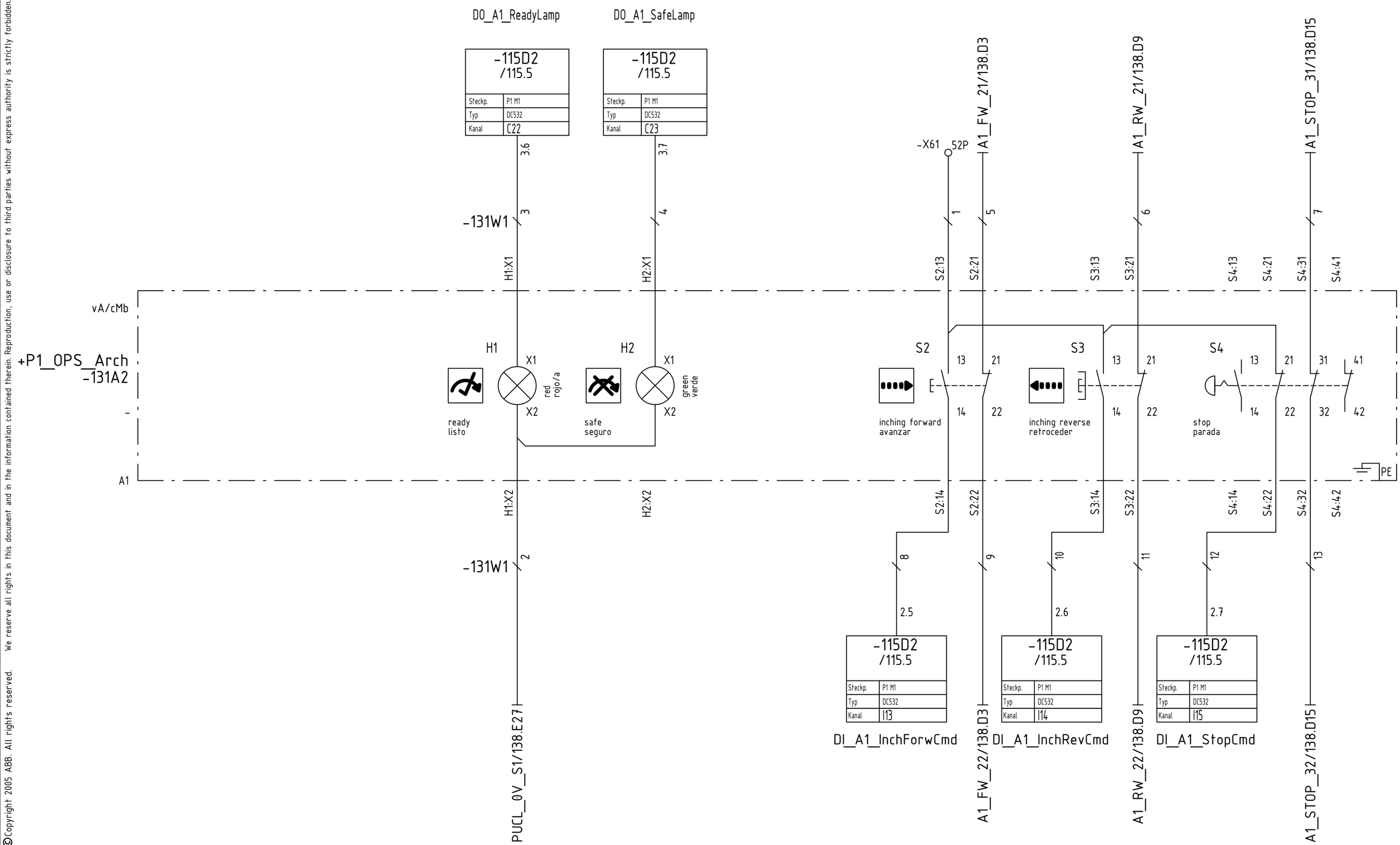

Issue	2008-10-15 TK	XYZ Project ID	ABBCH ATBN	Title: control station panel de mando A1 / operator side por el lado del usuario / tunnel tunel	3BHS2#####
Check.	2010-01-12 RePao	ABB: A-20#####			=PU___
©ABBCH	2010-01-12 16:14	OEM: ___ system sistema			Page 131
Rev. 0	2010-01-12 RePao	Std Name: OEM Std Issue: Typ			Language: EN ES Form: A3
					+PUCL <129 >134

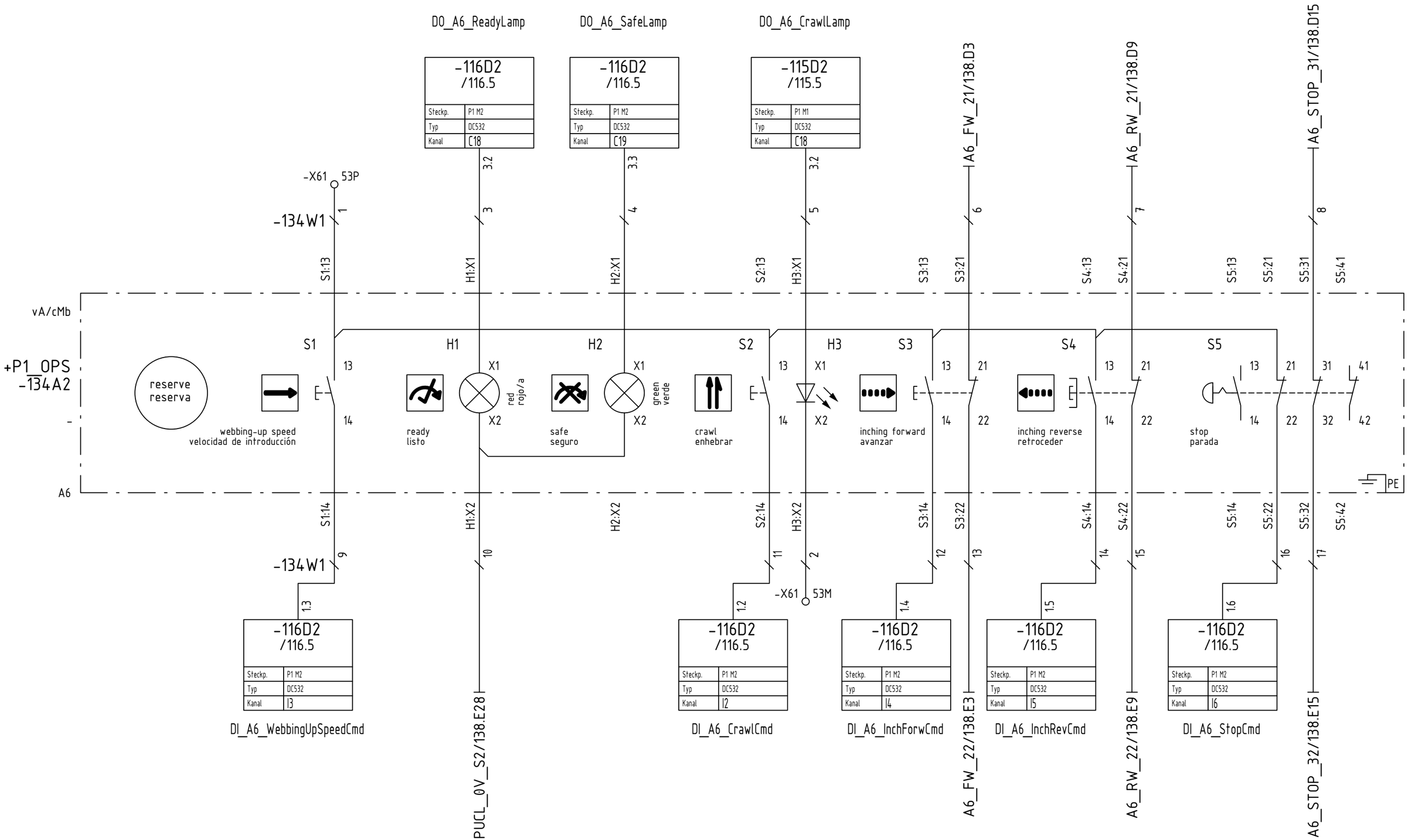

©Copyright 2005 ABB. All rights reserved. We reserve all rights in this document and in the information contained therein. Reproduction, use or disclosure to third parties without express authority is strictly forbidden.

Issue	2008-10-15 TK	XYZ Project ID	ABBCH ATBN	Title: control station / panel de mando A6 — operator side / por el lado del usuario	3BHS2#####
Check.	2010-01-12 RePao	ABB: A-20#####			=PU___
©ABBCH	2010-01-12 16:14	OEM: ___ system / sistema			Page 134
Rev. 0	2010-01-12 RePao	Std Name: OEM Std Issue: Typ		Language: EN ES Form: A3	+PUCL <131 >138

©Copyright 2005 ABB. All rights reserved. We reserve all rights in this document and in the information contained therein. Reproduction, use or disclosure to third parties without express authority is strictly forbidden.

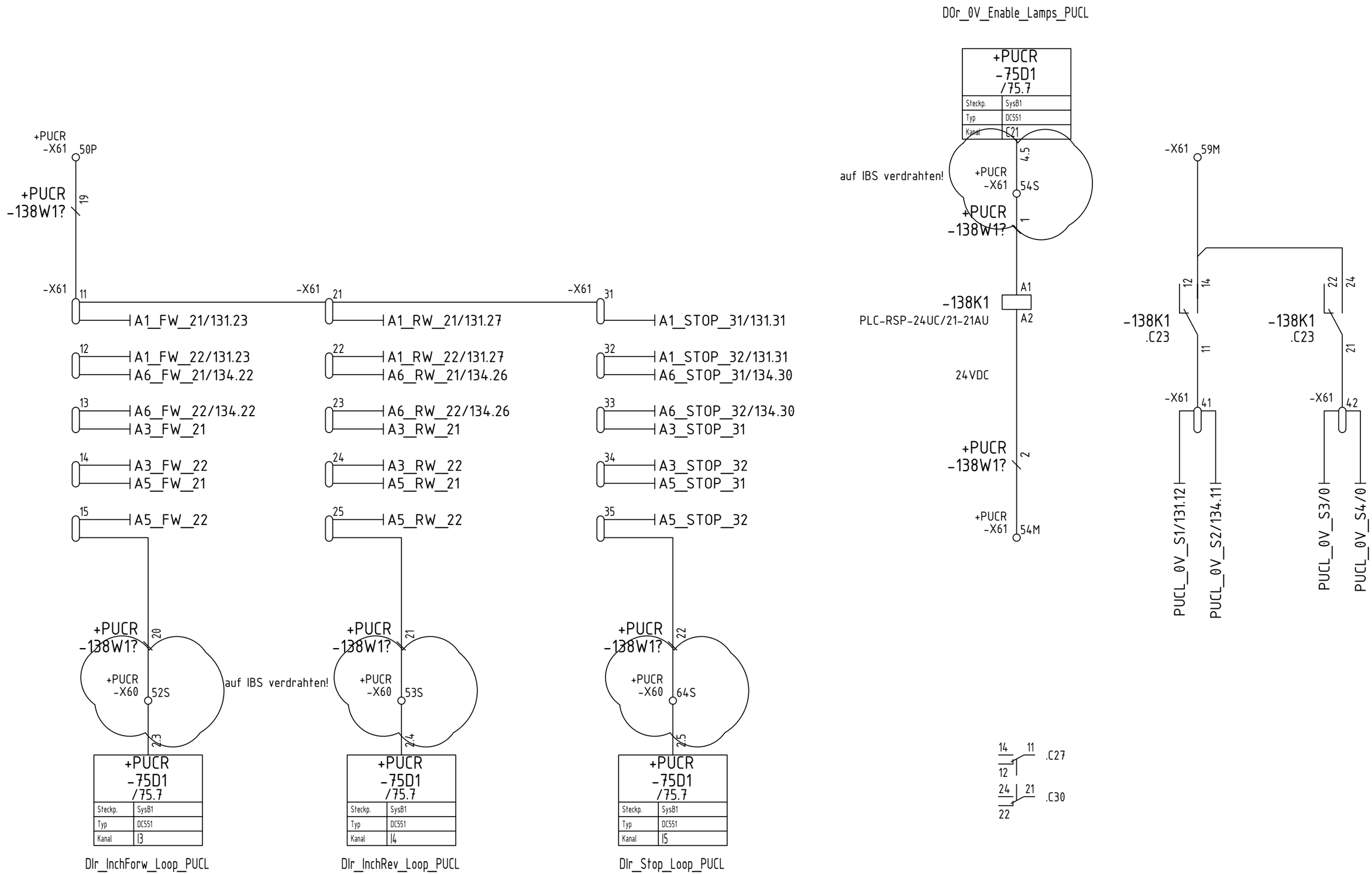

Issue	2008-10-15 TK	XYZ Project ID		Title: control station panel de mando / Forward / Reverse adelante / atrás / stop&lock parada y bloqueo	3BHS2#####	=PU___	Page 138
Check.	2010-01-12 RePao	ABB: A-20#####	system sistema				
©ABBCH	2010-01-12 16:14	OEM: ___		ABBCH ATBN	Language: EN ES	Form: A3	+PUCL
Rev. 0	2010-01-12 RePao	Std Name: OEM	Std Issue: Typ				<134 >140

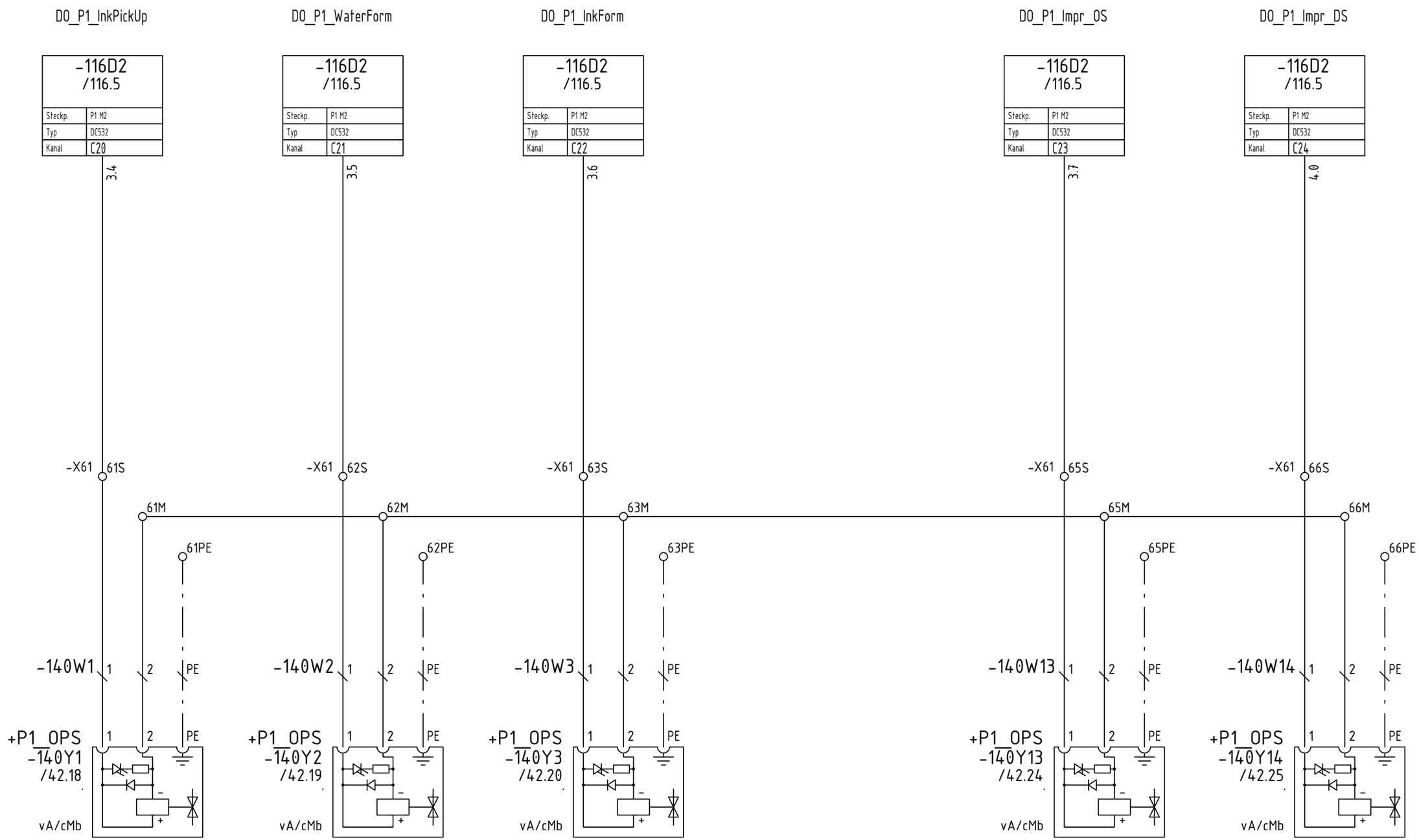

©Copyright 2005 ABB. All rights reserved. We reserve all rights in this document and in the information contained therein. Reproduction, use or disclosure to third parties without express authority is strictly forbidden.

Issue	2008-10-15 TK	XYZ Project ID	ABBCH ATBN	Title: solenoid valve / válvula solenoidal — OPS	3BHS2#####
Check.	2010-01-12 RePao	ABB: A-20#####			=PU___
©ABBCH	2010-01-12 16:14	OEM: ___ system / sistema			Page 140
Rev. 0	2010-01-12 RePao	Std Name: OEM Std Issue: Typ		Language: EN ES Form: A3	+PUCL <138 >160

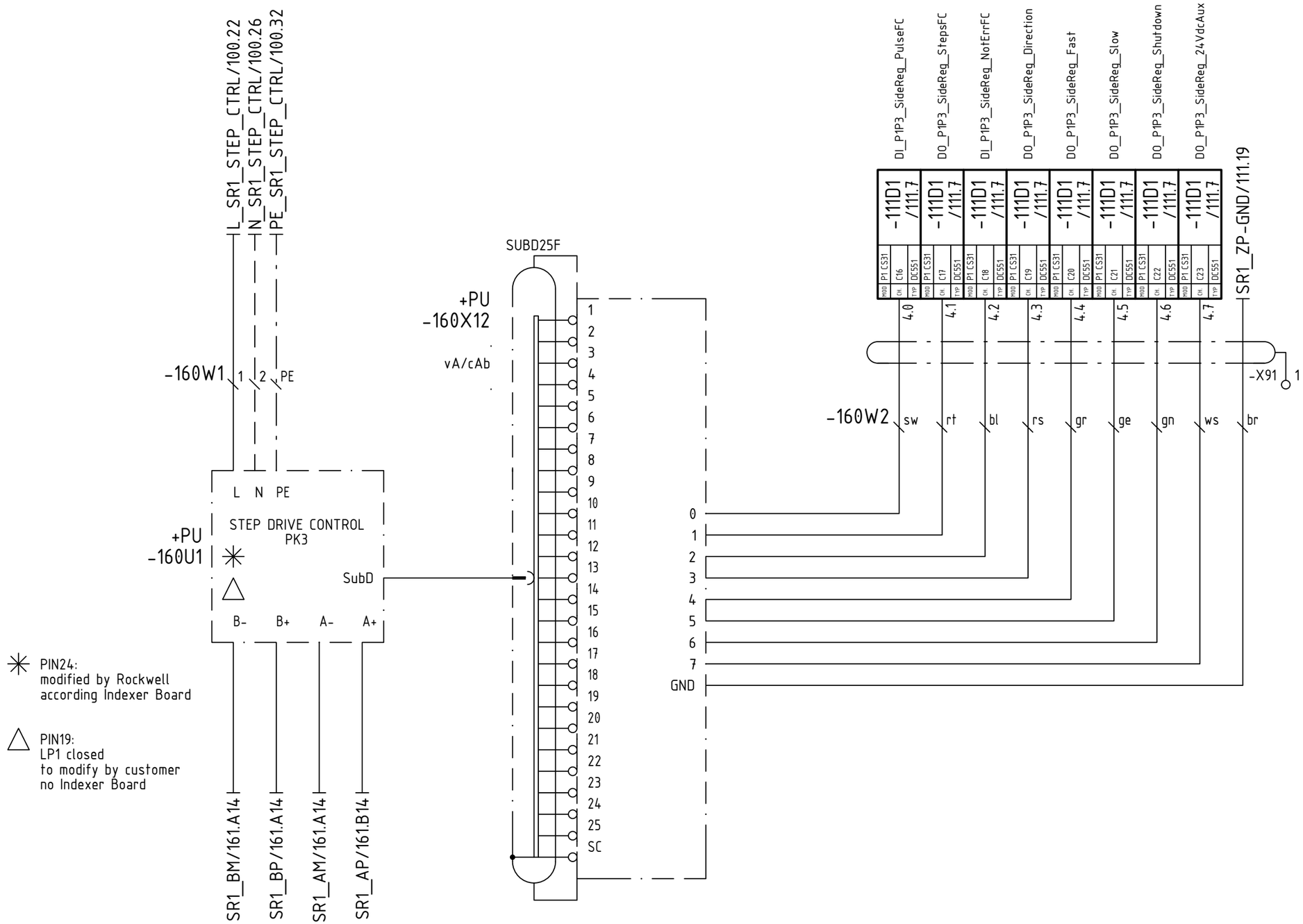

©Copyright 2005 ABB. All rights reserved. We reserve all rights in this document and in the information contained therein. Reproduction, use or disclosure to third parties without express authority is strictly forbidden.

Issue	2008-10-15 TK	XYZ Project ID	ABBCH ATBN	Title: side register / registro lateral — control / control — ParkerDrive PK3	3BHS2#####
Check.	2010-01-12 RePao	ABB: A-20#####			=PU___
©ABBCH	2010-01-12 16:14	OEM: ___ system / sistema			Page 160
Rev. 0	2010-01-12 RePao	Std Name: OEM Std Issue: Typ		Language: EN ES Form: A3	+PUCL <140 >161

©Copyright 2005 ABB. All rights reserved. We reserve all rights in this document and in the information contained therein. Reproduction, use or disclosure to third parties without express authority is strictly forbidden.

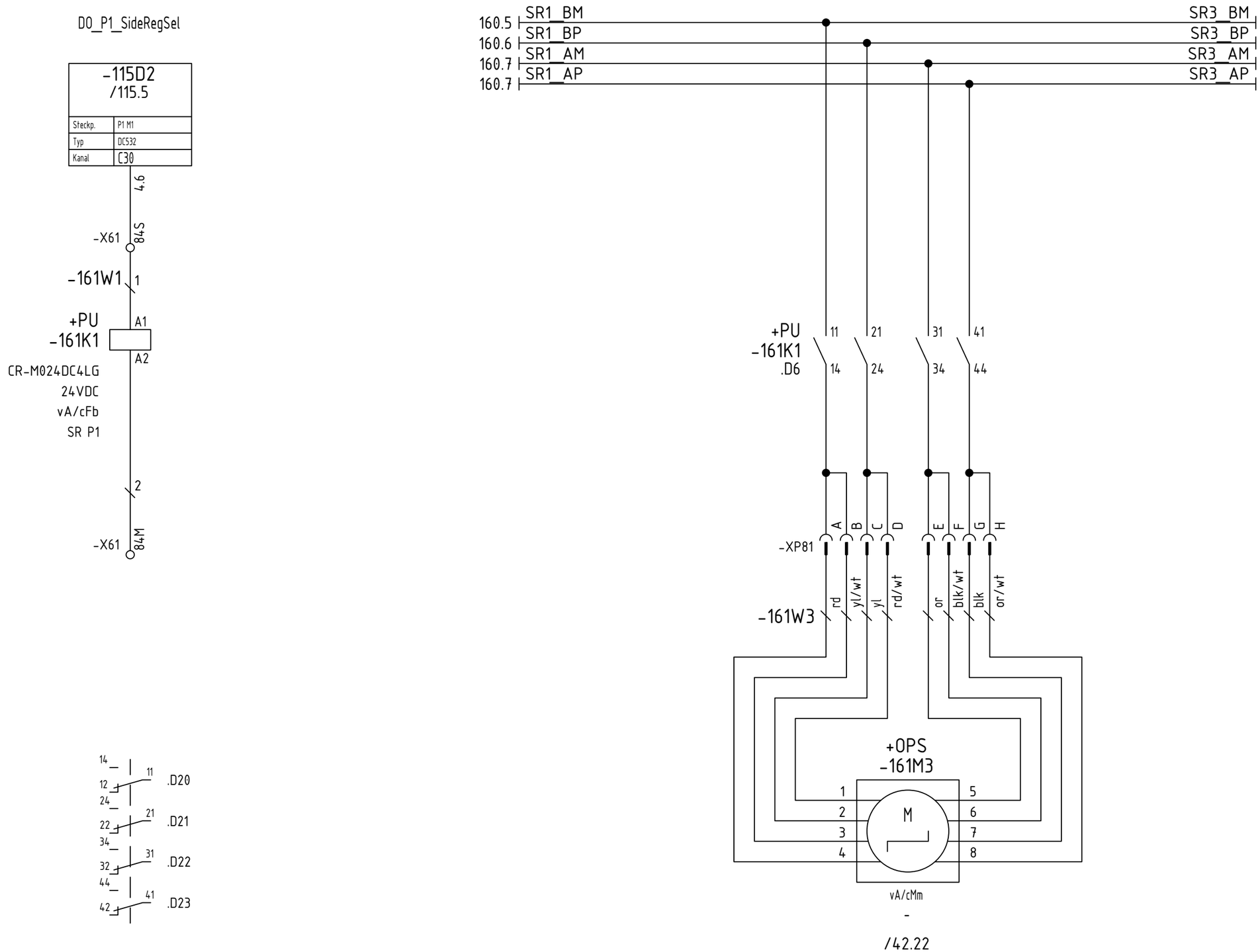

Issue	2008-11-06 TK	XYZ Project ID		ABB ABBCH ATBN	Title: side register / registro lateral — motor / motor	3BHS2#####	=PU___	Page 161
Check.	2010-01-12 RePao	ABB: A-20#####	system / sistema					
©ABBCH	2010-01-12 16:14	OEM: ___				Language: EN ES	Form: A3	+PUCL
Rev. 0	2010-01-12 RePao	Std Name: OEM	Std Issue: Typ					<160 >165

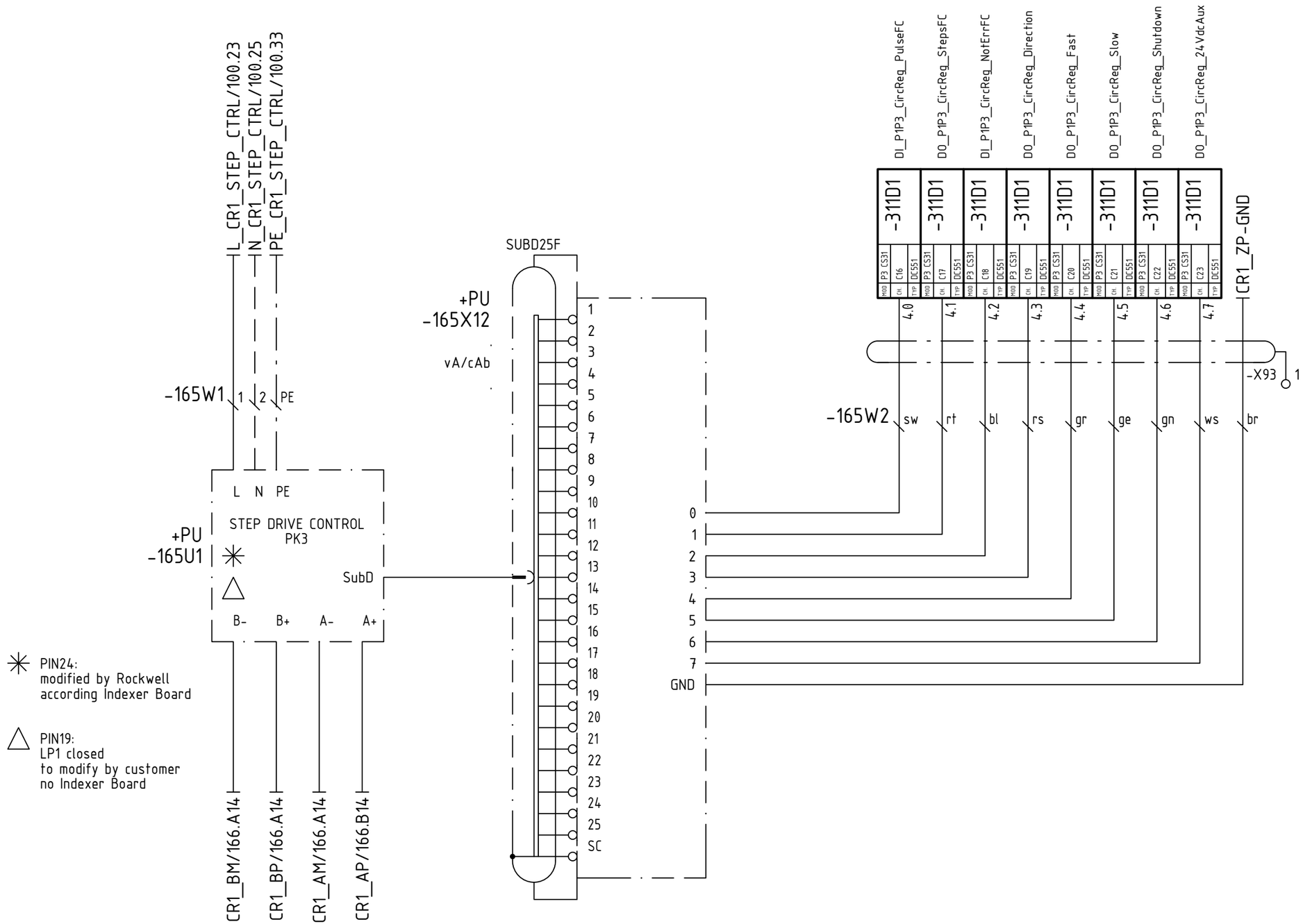

©Copyright 2005 ABB. All rights reserved. We reserve all rights in this document and in the information contained therein. Reproduction, use or disclosure to third parties without express authority is strictly forbidden.

Issue	2008-10-15 TK	XYZ Project ID	ABBCH ATBN	Title: circumferential register control / registro circunferencial control — ParkerDrive PK3	3BHS2#####
Check.	2010-01-12 RePao	ABB: A-20#####			=PU___
©ABBCH	2010-01-12 16:14	OEM: ___	system / sistema		Page 165
Rev. 0	2010-01-12 RePao	Std Name: OEM	Std Issue: Typ	Language: EN ES	Form: A3
					+PUCL
					<161 >166

©Copyright 2005 ABB. All rights reserved. We reserve all rights in this document and in the information contained therein. Reproduction, use or disclosure to third parties without express authority is strictly forbidden.

DO_P1_CircRegSel

-115D2
/115.5

Steckp.	P1 M1
Typ	DC532
Kanal	C31

4.7

-X61 89S

-161W1 3

+PU
-166K1 A1 A2

CR-M024DC4LG
24VDC
vA/cFb
CR P1

4

-X61 89M

165.5 CR1_BM — CR3_BM
165.6 CR1_BP — CR3_BP
165.7 CR1_AM — CR3_AM
165.7 CR1_AP — CR3_AP

+PU
-166K1
.D6

11 14
21 24
31 34
41 44

-166W1 ws br gn ge

+DRS
-166M6

1 2 3 4

M

vA/cMm
-
/43.22

14 12 11 .D20
24 22 21 .D21
34 32 31 .D22
44 42 41 .D22

Issue	2008-11-06 TK	XYZ Project ID	ABBCH ATBN	Title: circumferential register motor / registro circunferencial motor	3BHS2#####	=PU___	Page 166
Check.	2010-01-12 RePao	ABB: A-20##### system / OEM: ___ sistema			Language: EN ES	Form: A3	+PUCL	<165 >170
©ABBCH	2010-01-12 16:14						
Rev. 0	2010-01-12 RePao	Std Name: OEM	Std Issue: Typ				

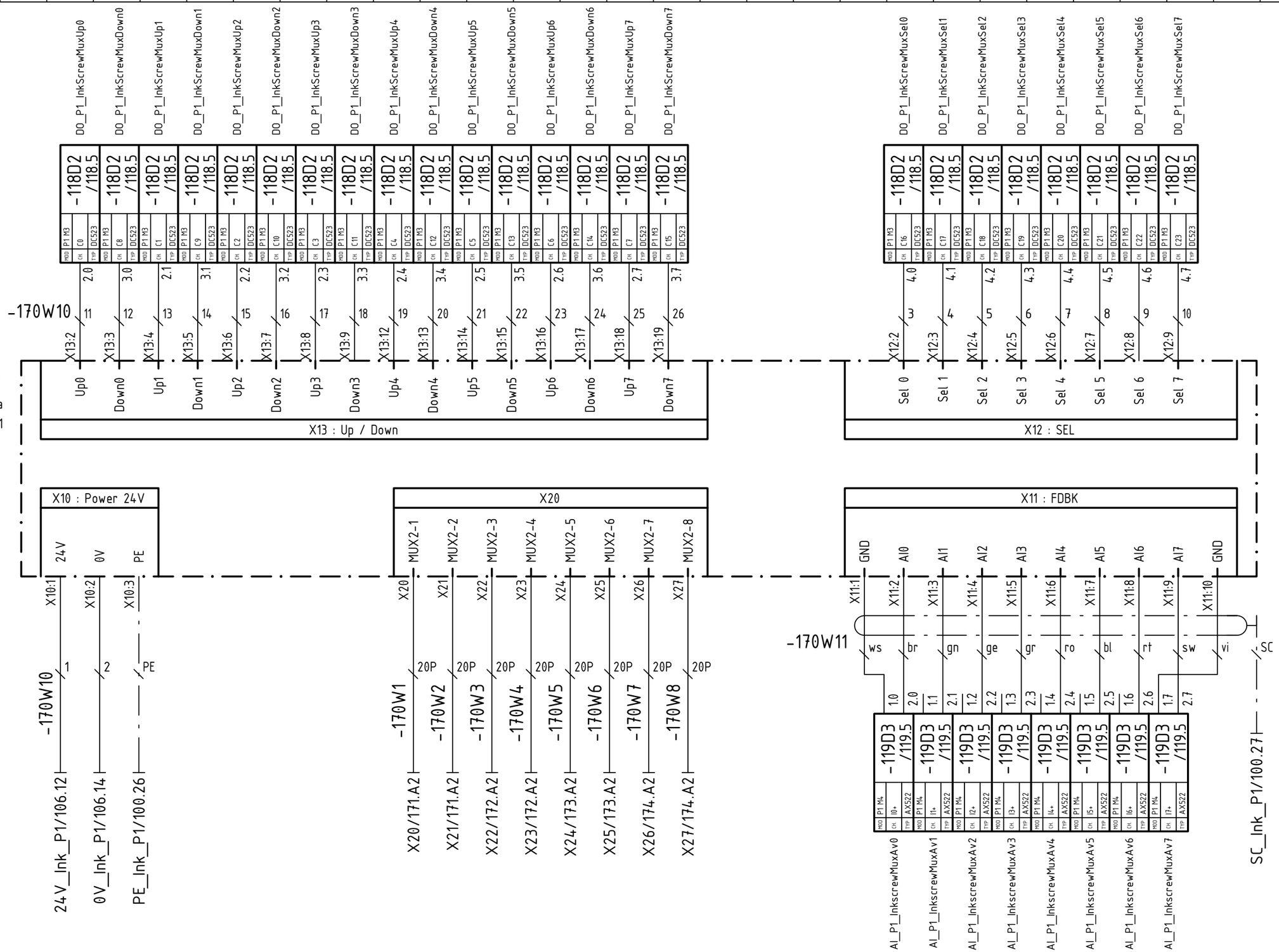

©Copyright 2005 ABB. All rights reserved. We reserve all rights in this document and in the information contained therein. Reproduction, use or disclosure to third parties without express authority is strictly forbidden.

Issue	2008-10-15 TK	XYZ Project ID	ABBCH ATBN	Title: printing couple / cuerpo de impresión	ink screws / Tornillos de tinta	Device MUX1	3BHS2#####	=PU___	Page 170
Check.	2010-01-12 RePao	ABB: A-20#####							
©ABBCH	2010-01-12 16:14	OEM: ___ system / sistema					Language: EN ES	Form: A3	+PUCL	<166 >171
Rev. 0	2010-01-12 RePao	Std Name: OEM	Std Issue: Typ						

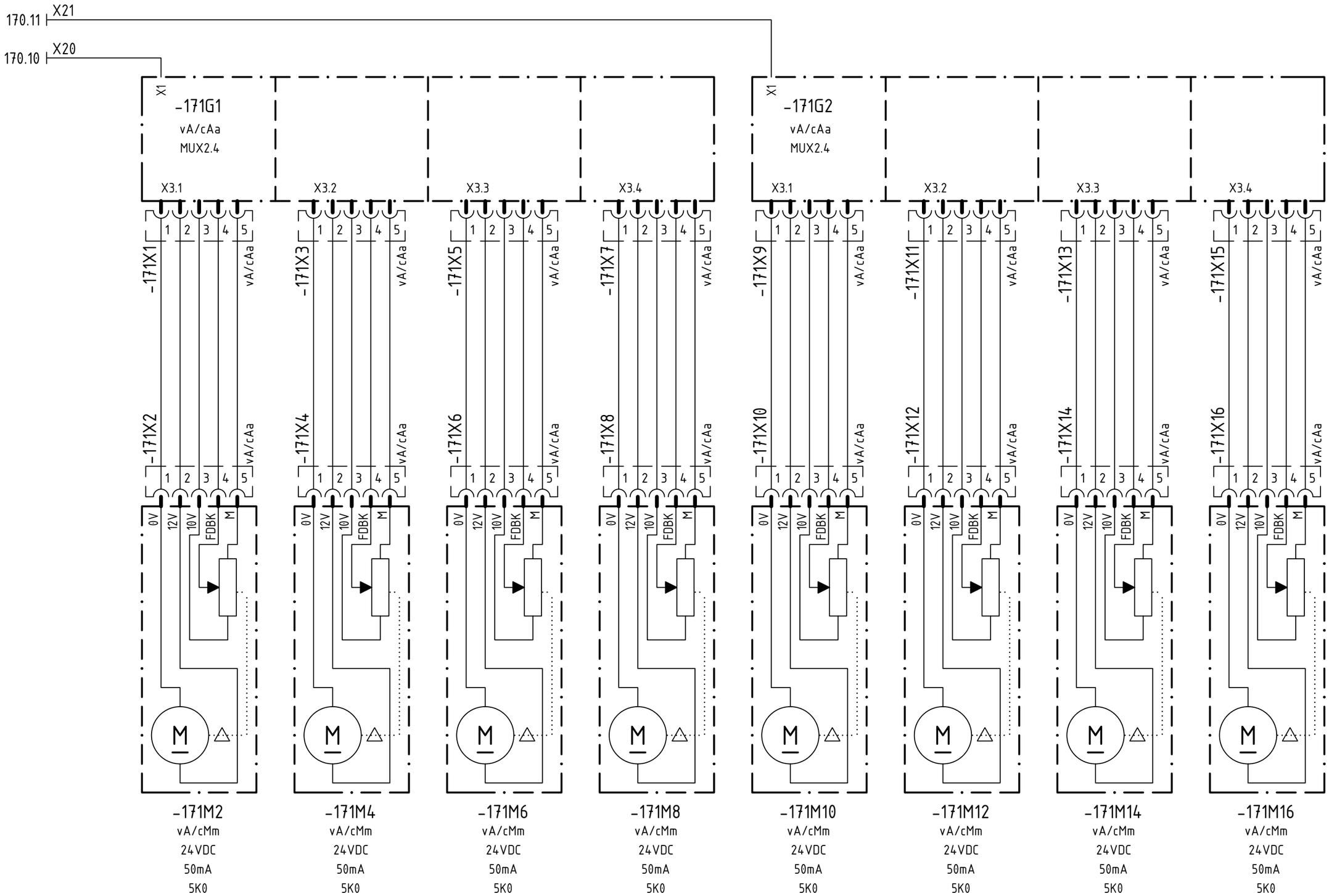

©Copyright 2005 ABB. All rights reserved. We reserve all rights in this document and in the information contained therein. Reproduction, use or disclosure to third parties without express authority is strictly forbidden.

Issue	2008-10-15 TK	XYZ Project ID	ABBCH ATBN	Title: printing couple / cuerpo de impresión	ink screws / Tornillos de tinta	ink zone / zona de tinta A	3BHS2#####	=PU___	Page 171
Check.	2010-01-12 RePao	ABB: A-20#####							
©ABBCH	2010-01-12 16:14	OEM: ___ system / sistema					Language: EN ES	Form: A3	+PUCL	<170 >172
Rev. 0	2010-01-12 RePao	Std Name: OEM	Std Issue: Typ						

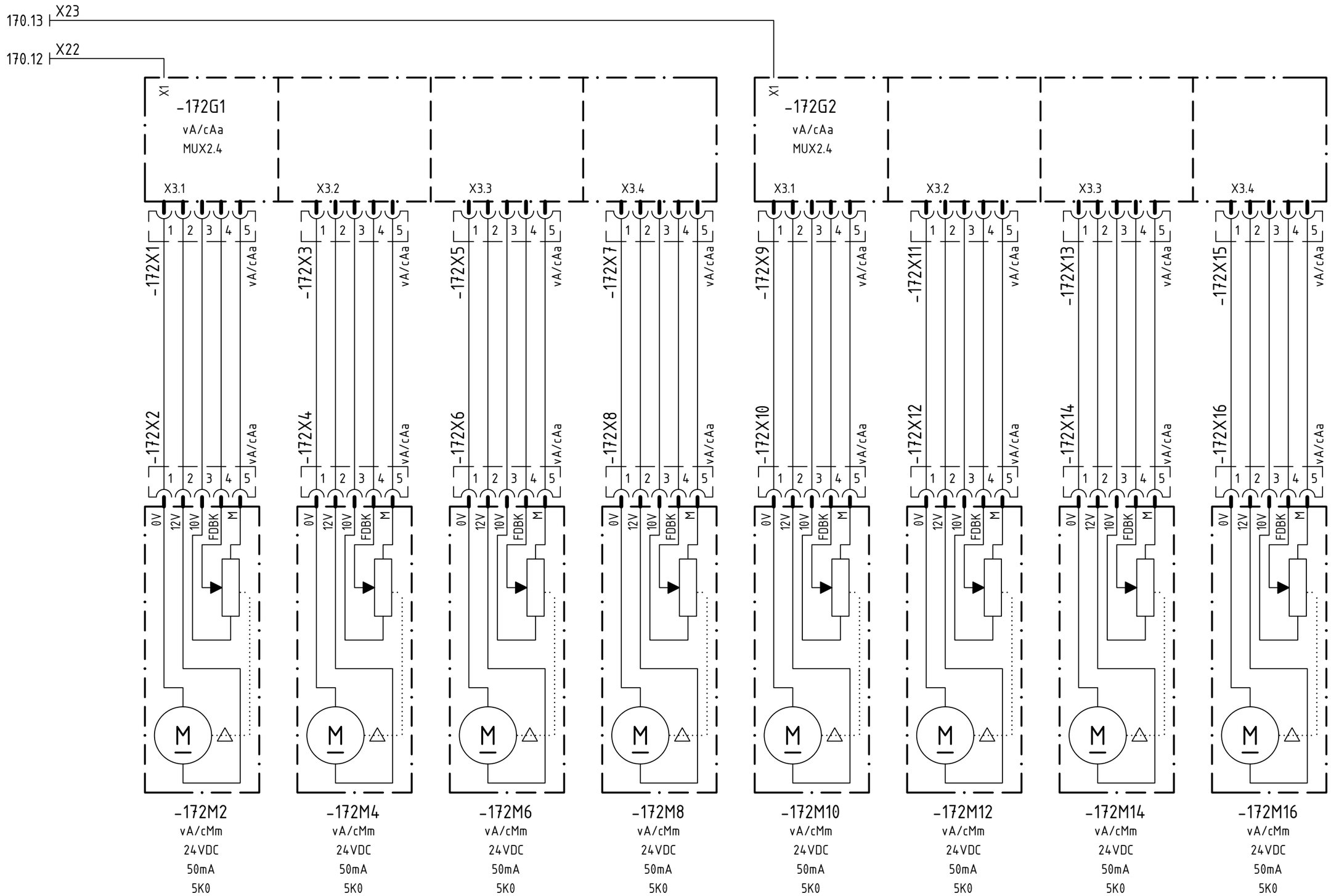

©Copyright 2005 ABB. All rights reserved. We reserve all rights in this document and in the information contained therein. Reproduction, use or disclosure to third parties without express authority is strictly forbidden.

Issue	2008-10-15 TK	XYZ Project ID	ABBCH ATBN	Title: printing couple / cuerpo de impresión; ink screws / Tornillos de tinta; ink zone / zona de tinta B	3BHS2#####
Check.	2010-01-12 RePao	ABB: A-20#####			=PU___
©ABBCH	2010-01-12 16:14	OEM: ___ system / sistema			Page 172
Rev. 0	2010-01-12 RePao	Std Name: OEM Std Issue: Typ		Language: EN ES Form: A3	+PUCL <171 >173

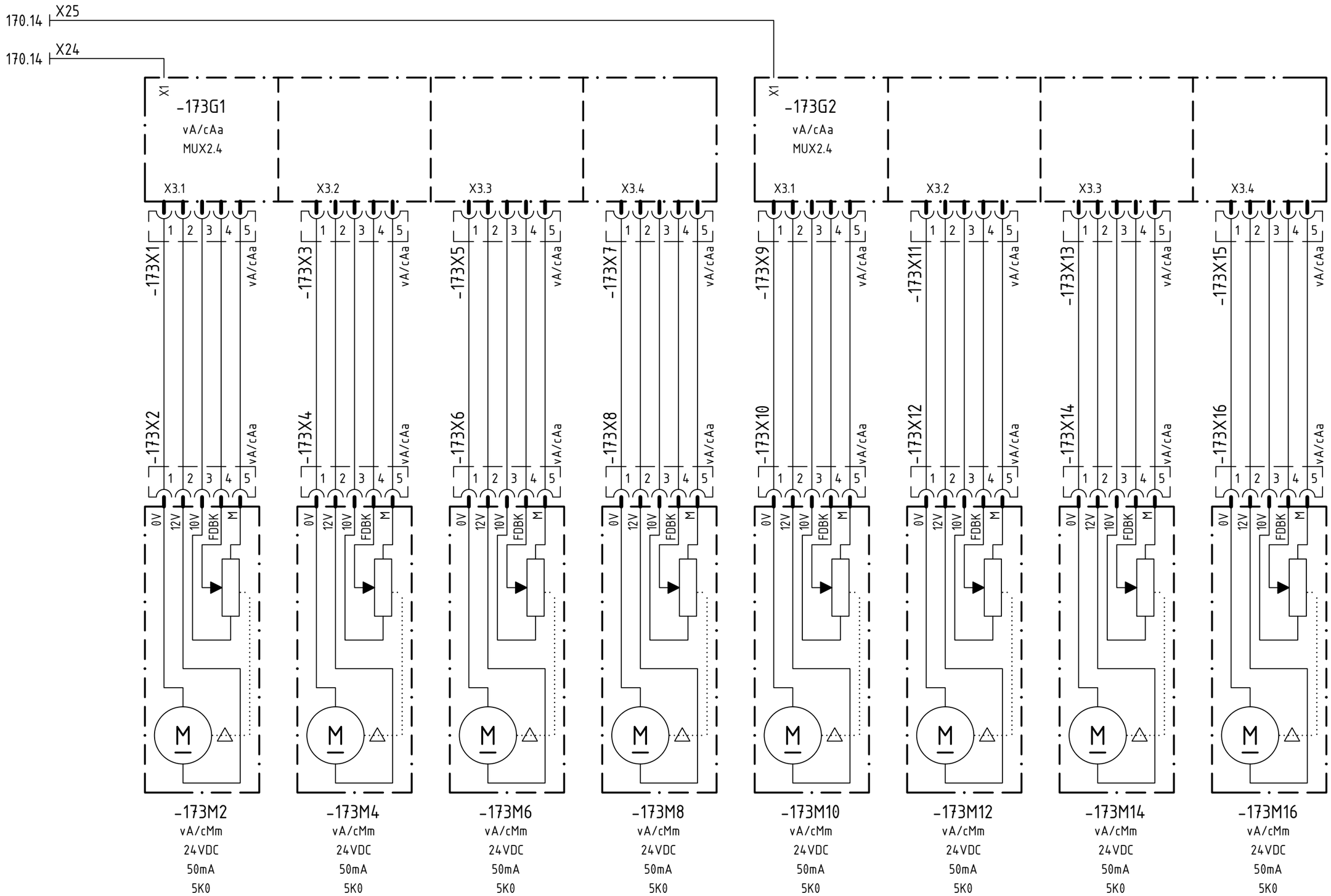

©Copyright 2005 ABB. All rights reserved. We reserve all rights in this document and in the information contained therein. Reproduction, use or disclosure to third parties without express authority is strictly forbidden.

Issue	2008-10-15 TK	XYZ Project ID	ABBCH ATBN	Title: printing couple / cuerpo de impresión; ink screws / Tornillos de tinta; ink zone / zona de tinta C	3BHS2#####	=PU___
Check.	2010-01-12 RePao	ABB: A-20#####			Language: EN ES	Page 173
©ABBCH	2010-01-12 16:14	OEM: ___ system / sistema			Form: A3	+PUCL
Rev. 0	2010-01-12 RePao	Std Name: OEM	Std Issue: Typ			<172 >174

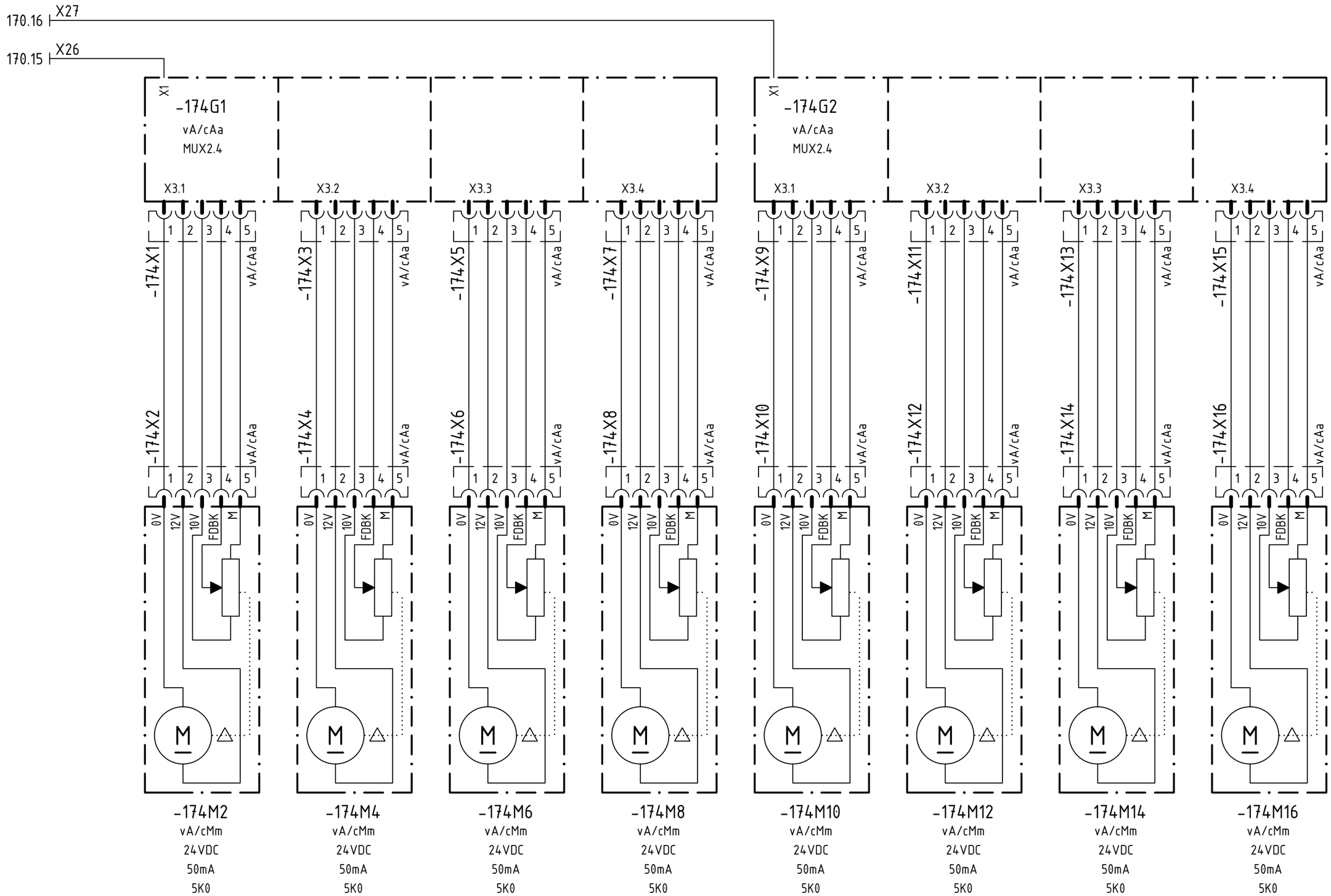

©Copyright 2005 ABB. All rights reserved. We reserve all rights in this document and in the information contained therein. Reproduction, use or disclosure to third parties without express authority is strictly forbidden.

Issue	2008-10-15 TK	XYZ Project ID	ABBCH ATBN	Title: printing couple / cuerpo de impresión	ink screws / Tornillos de tinta	ink zone / zona de tinta D	3BHS2#####	=PU___	Page 174
Check.	2010-01-12 RePao	ABB: A-20#####							
©ABBCH	2010-01-12 16:14	OEM: ___ system / sistema					Language: EN ES	Form: A3	+PUCL	<173 >175
Rev. 0	2010-01-12 RePao	Std Name: OEM	Std Issue: Typ						

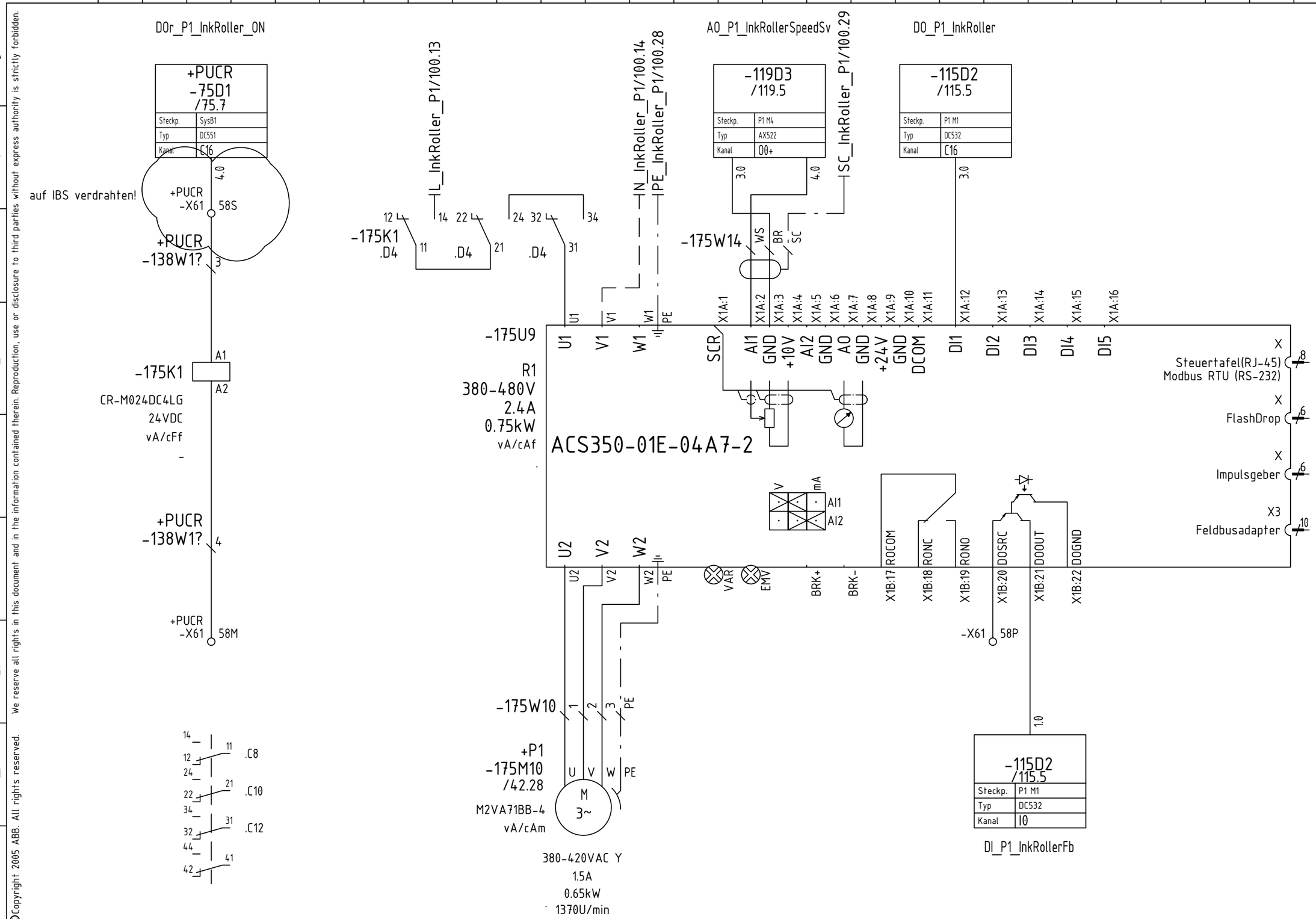

©Copyright 2005 ABB. All rights reserved. We reserve all rights in this document and in the information contained therein. Reproduction, use or disclosure to third parties without express authority is strictly forbidden.

Issue	2008-10-15 TK	XYZ Project ID	ABBCH ATBN	Title: printing couple / cuerpo de impresión — ink-fountain roller / cilindro del tintero	3BHS2#####
Check.	2010-01-12 RePao	ABB: A-20#####			=PU___
©ABBCH	2010-01-12 16:14	OEM: ___ system / sistema			Page 175
Rev. 0	2010-01-12 RePao	Std Name: OEM Std Issue: Typ		Language: EN ES Form: A3	+PUCL <174 >176

DO_P1_InkRollerLamp

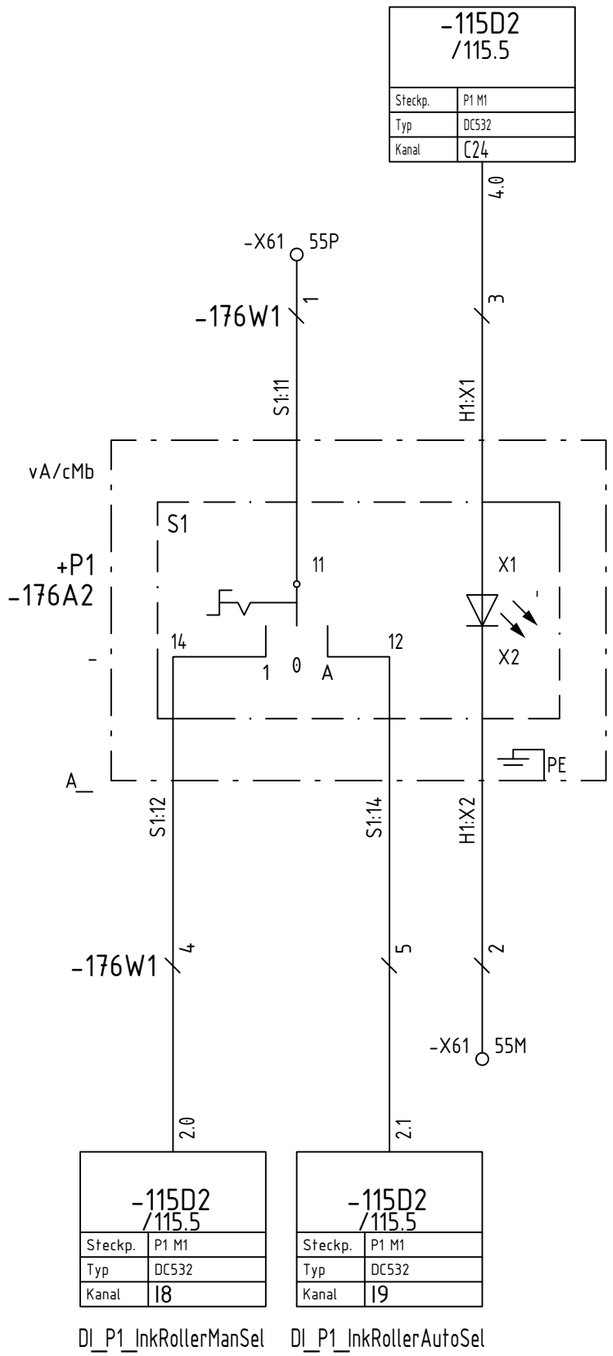

©Copyright 2005 ABB. All rights reserved. We reserve all rights in this document and in the information contained therein. Reproduction, use or disclosure to third parties without express authority is strictly forbidden.

Issue	2008-10-23 TK	XYZ Project ID	ABBCH ATBN	Title: printing couple / cuerpo de impresión; ink-fountain roller / cilindro del tintero; duct roller / cilindro del tintero	3BHS2#####
Check.	2010-01-12 RePao	ABB: A-20#####			=PU___
©ABBCH	2010-01-12 16:14	OEM: ___ system / sistema			Page 176
Rev. 0	2010-01-12 RePao	Std Name: OEM Std Issue: Typ		Language: EN ES Form: A3	+PUCL <175 >177

©Copyright 2005 ABB. All rights reserved. We reserve all rights in this document and in the information contained therein. Reproduction, use or disclosure to third parties without express authority is strictly forbidden.

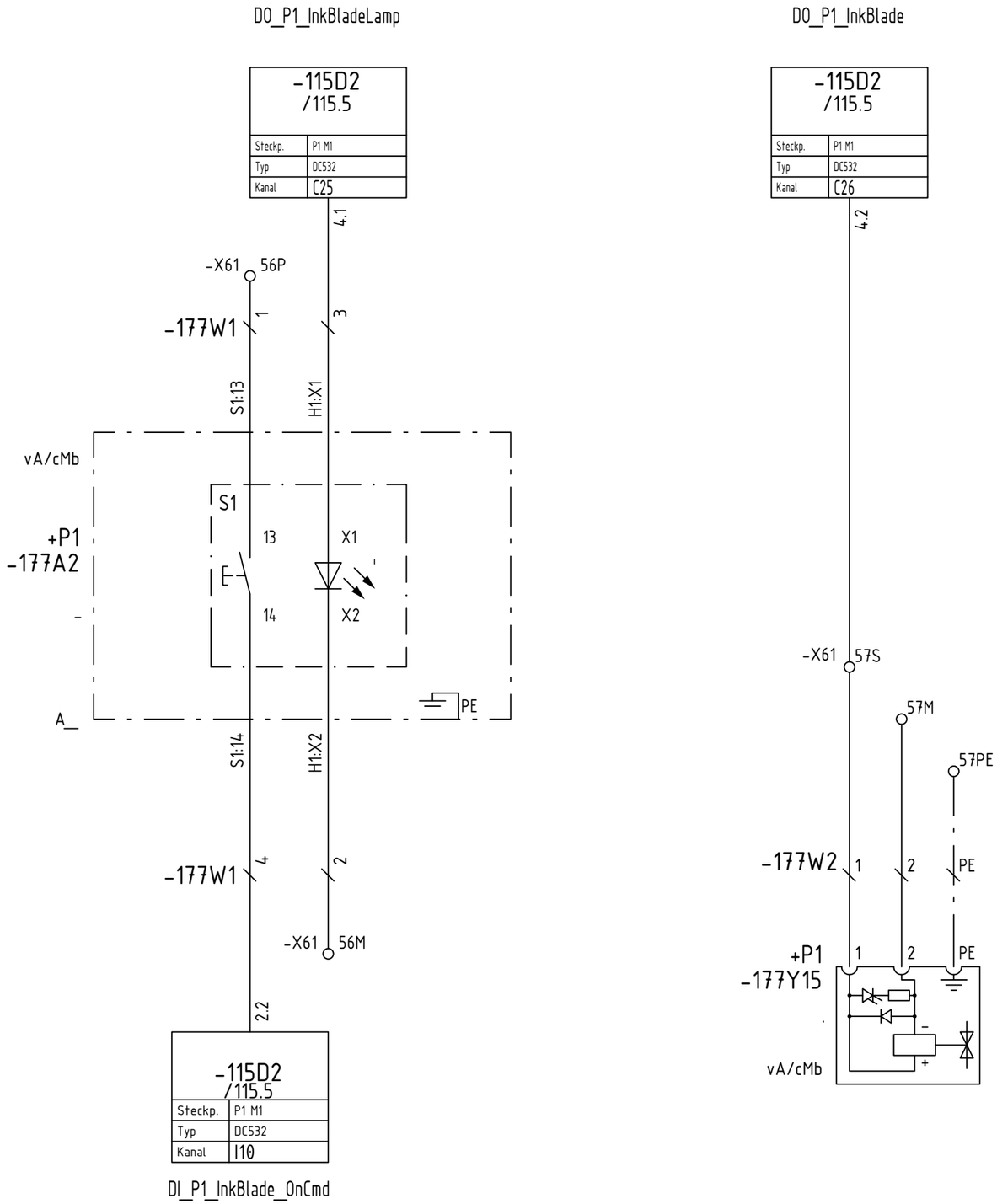

Issue	2008-10-23 TK	XYZ Project ID		ABB ABBCH ATBN	Title: printing couple / cuerpo de impresión	ink-fountain roller / cilindro del tintero	wash up blade / rasqueta de lavado
Check.	2010-01-12 RePao	ABB: A-20#####	system / sistema				
©ABBCH	2010-01-12 16:14	OEM: ___					
Rev. 0	2010-01-12 RePao	Std Name: OEM	Std Issue: Typ				

3BHS2#####	=PU___	Page 177		
Language: EN ES	Form: A3	+PUCL	<176 >180	

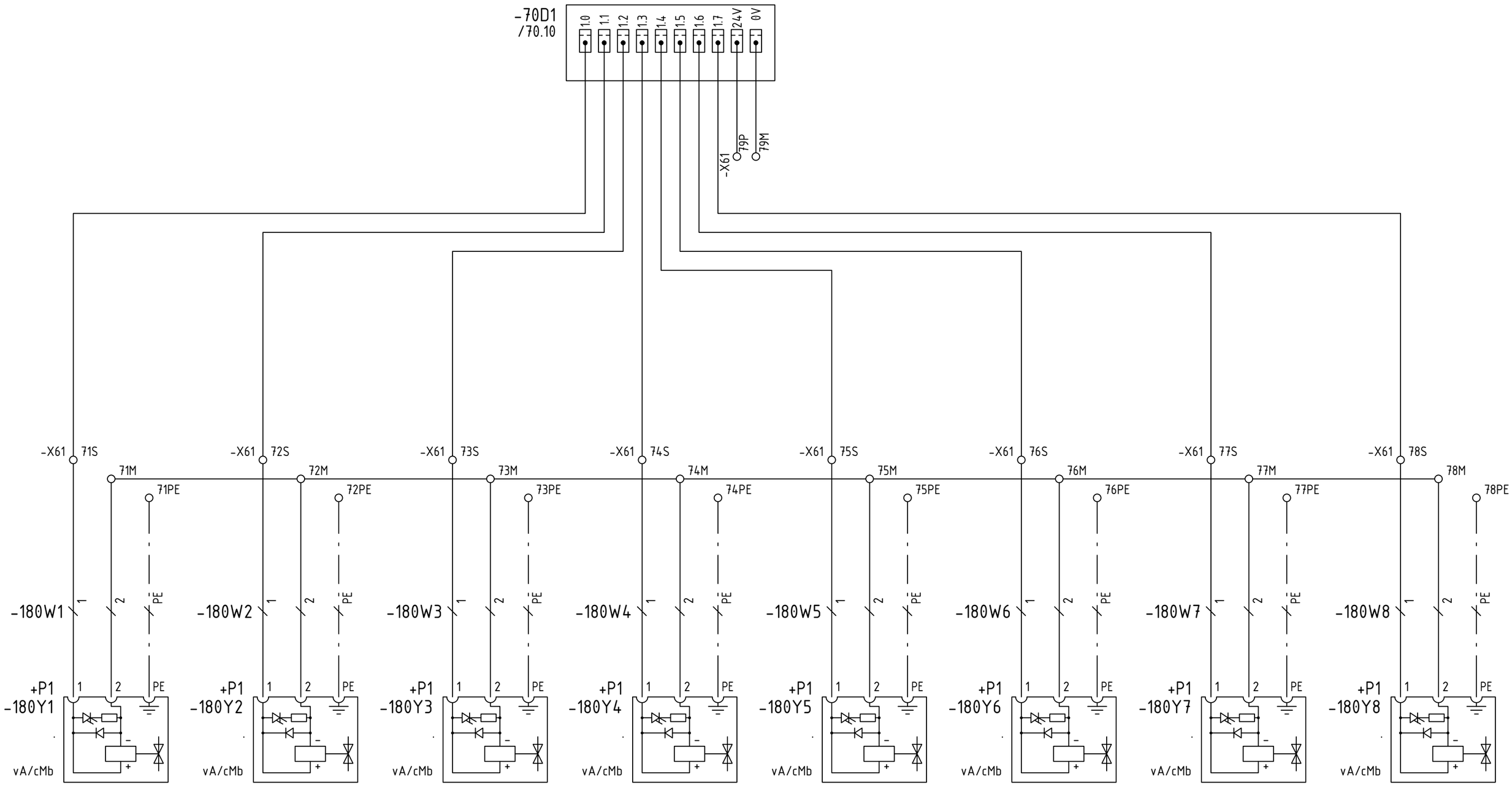

©Copyright 2005 ABB. All rights reserved. We reserve all rights in this document and in the information contained therein. Reproduction, use or disclosure to third parties without express authority is strictly forbidden.

Issue	2008-10-15 TK	XYZ Project ID	ABBCH ATBN	Title: spray bar barra de pulverización	3BHS2#####
Check.	2010-01-12 RePao	ABB: A-20##### system OEM: ___ sistema			=PU___
©ABBCH	2010-01-12 16:14				Page 180
Rev. 0	2010-01-12 RePao	Std Name: OEM Std Issue: Typ		Language: EN ES Form: A3	+PUCL <177 >200

©Copyright 2005 ABB. All rights reserved. We reserve all rights in this document and in the information contained therein. Reproduction, use or disclosure to third parties without express authority is strictly forbidden.

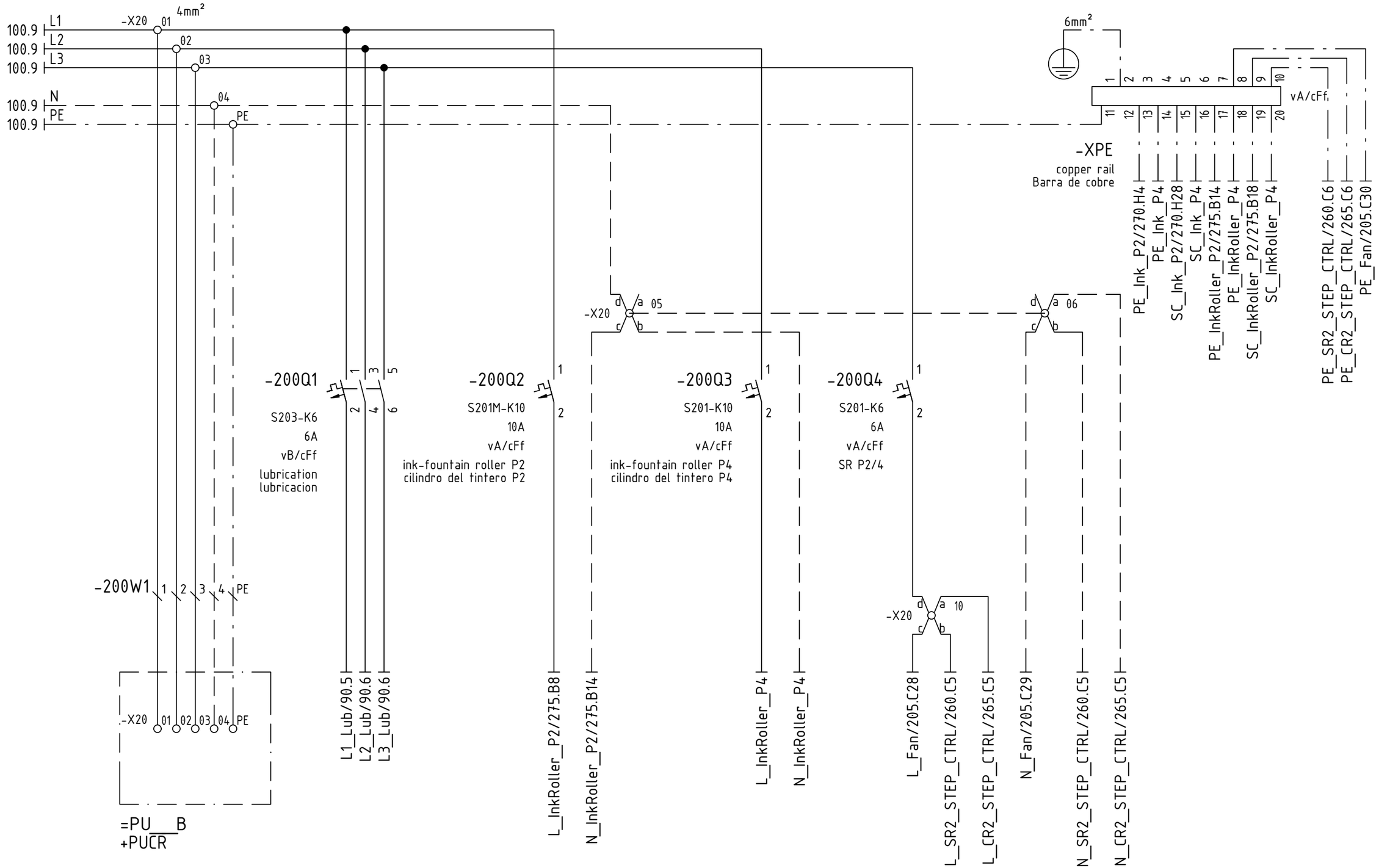

Issue	2008-10-22 TK	XYZ Project ID	ABB ATBN	Title: supply / fuente de alimentación — 230VAC/400VAC	3BHS2#####
Check.	2010-01-12 RePao	ABB: A-20#####			=PU___
©ABBCH	2010-01-12 16:14	OEM: ___ system / sistema			Page 200
Rev. 0	2010-01-12 RePao	Std Name: OEM Std Issue: Typ		Language: EN ES Form: A3	+PUCR <180 >205

©Copyright 2005 ABB. All rights reserved. We reserve all rights in this document and in the information contained therein. Reproduction, use or disclosure to third parties without express authority is strictly forbidden.

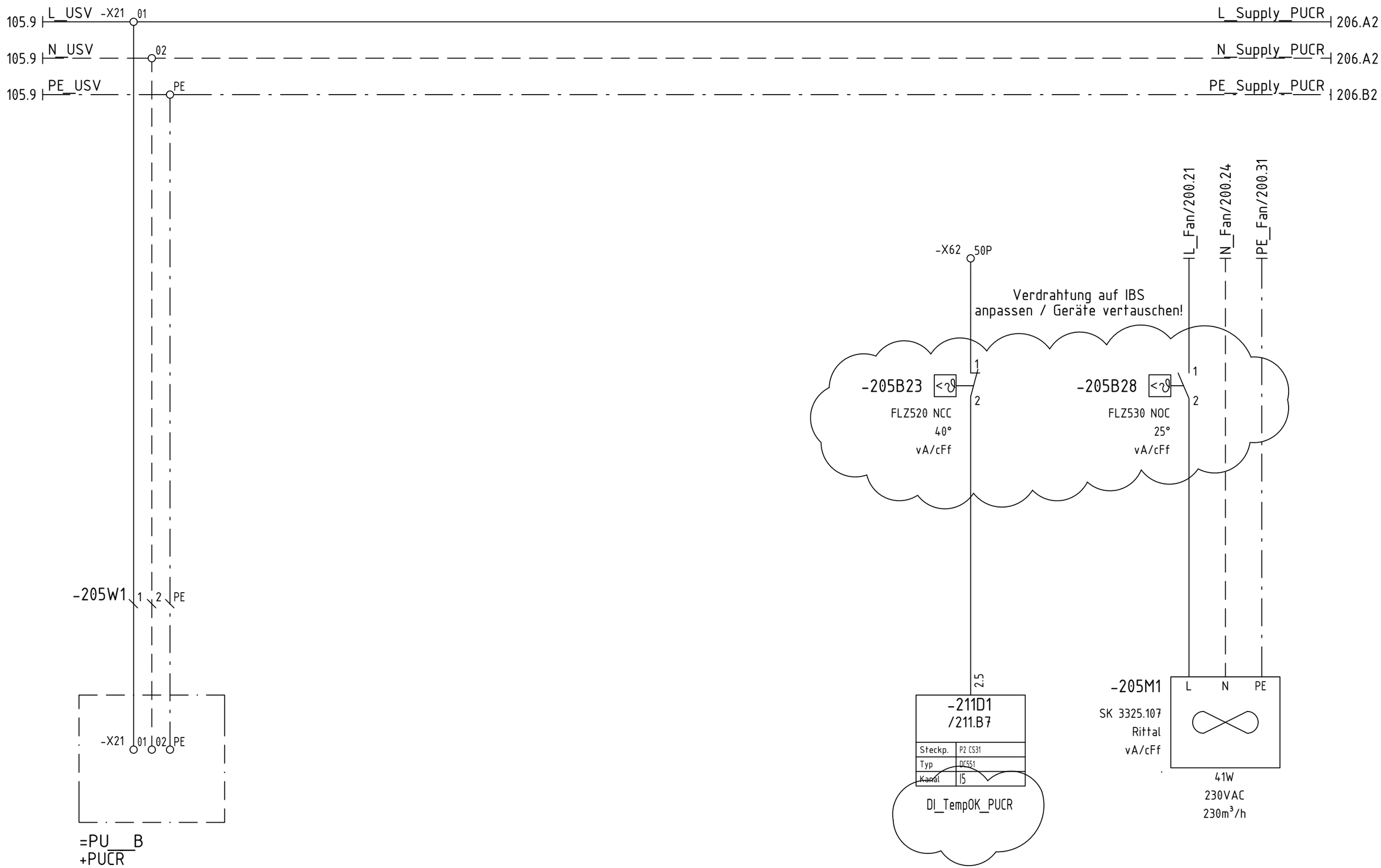

Issue	2008-10-21 TK	XYZ Project ID	ABBCH ATBN	Title: supply control Alimentación control	3BHS2#####
Check.	2010-01-12 RePao	ABB: A-20##### system			=PU___
©ABBCH	2010-01-12 16:14	OEM: ___ sistema			Page 205
Rev. 0	2010-01-12 RePao	Std Name: OEM Std Issue: Typ		Language: EN ES Form: A3	+PUCR <200 >206

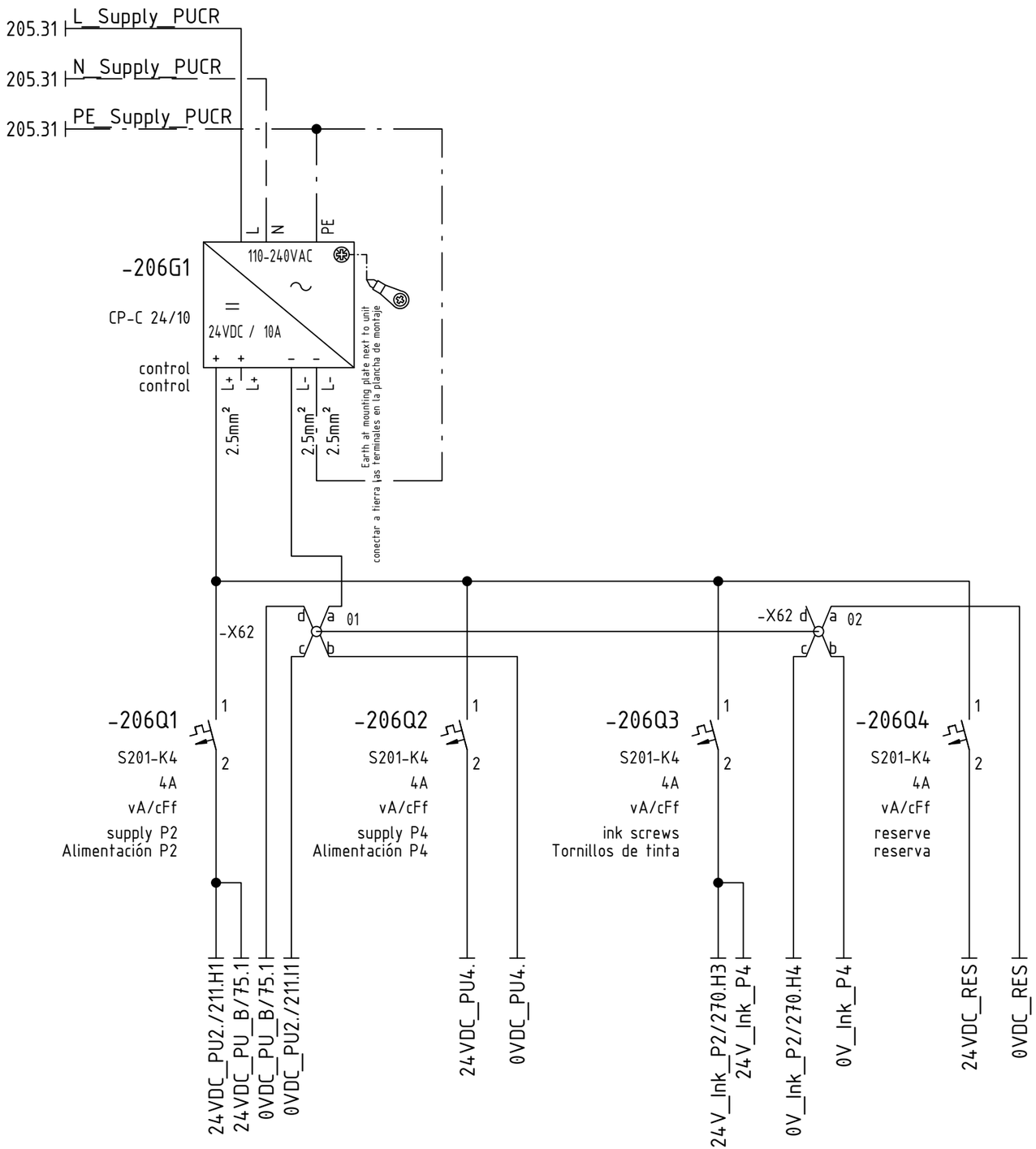

©Copyright 2005 ABB. All rights reserved. We reserve all rights in this document and in the information contained therein. Reproduction, use or disclosure to third parties without express authority is strictly forbidden.

Issue	2008-10-21 TK	XYZ Project ID		3BHS2#####	=PU___
Check.	2010-01-12 RePao	ABB: A-20#####	system sistema		Page 206
©ABBCH	2010-01-12 16:14	OEM: ___		Language: EN ES	Form: A3
Rev. 0	2010-01-12 RePao	Std Name: OEM	Std Issue: Typ		+PUCR

ABB ABBCH ATBN

Title: supply Alimentación 24VDC power potencia

<205
>211

©Copyright 2005 ABB. All rights reserved. We reserve all rights in this document and in the information contained therein. Reproduction, use or disclosure to third parties without express authority is strictly forbidden.

-211D1
DC551-CS31
vA/cAf

DC551

1.0	R1	PWR	I0	-	C8	-	C16	DI_P2P4_SideReg_PulseFC
1.1	R2	CS31	I1	-	C9	-	C17	DO_P2P4_SideReg_StepsFC
1.2	B1	S-ERR	I2	-	C10	-	C18	DI_P2P4_SideReg_NotErrFC
1.3	B2	I/O-Bus	I3	-	C11	-	C19	DO_P2P4_SideReg_Direction
1.4	FE		I4	-	C12	-	C20	DO_P2P4_SideReg_Fast
1.5	B1	ADDR x10	I5	DI_TempOK_PUCR	C13	-	C21	DO_P2P4_SideReg_Slow
1.6	B2	7	I6	DI_OilPumpOvl	C14	DO_OilPump	C22	DO_P2P4_SideReg_Shutdown
1.7	FE		I7	DI_OilPressureOk	C15	DO_OilBypass_Res	C23	DO_P2P4_SideReg_24VdcAux
1.8	UP	ADDR x1	2.8	UP	3.8	UP	4.8	UP
1.9	ZP	4	2.9	ZP	3.9	ZP	4.9	ZP
CH-ERR1			CH-ERR2		CH-ERR3		CH-ERR4	

P2 CS31

UP 24VDC 200W

CS31 8DI 16DC
Input 24VDC
Output 24VDC 0.5A

CS31-bus page 51/52
CS31-bus pagina 51/52

1.0		2.0		3.0		4.0	/260.C18
1.1		2.1		3.1		4.1	/260.C19
1.2		2.2		3.2		4.2	/260.C19
1.3		2.3		3.3		4.3	/260.C20
1.4		2.4		3.4		4.4	/260.C21
1.5		2.5	/205.23	3.5		4.5	/260.C22
1.6		2.6	/90.20	3.6	/90.12	4.6	/260.C23
1.7		2.7	/90.24	3.7	/90.29	4.7	/260.C24
1.8	UP	2.8	UP	3.8	UP	4.8	UP
1.9	ZP	2.9	ZP	3.9	ZP	4.9	ZP

-211D1.1

TU552-CS31
vA/cAf

206.4 24VDC_PU2. -X62 51P 51P
206.5 0VDC_PU2. -X62 51M 51M

SR2_ZP-GND/260.C24

24VDC_PU2/215.G2
0VDC_PU2/215.G2

Issue	2008-10-23 TK	XYZ Project ID	system sistema	ABBCH ATBN	Title: AC500 CS31-BUS	coupler acoplador	printing couple cuerpo de impresión 2	3BHS2#####	=PU___	Page 211
Check.	2010-01-12 RePao	ABB: A-20#####								
©ABBCH	2010-01-12 16:14	OEM: ___						Language: EN ES	Form: A3	+PUCR	<206 >215
Rev. 0	2010-01-12 RePao	Std Name: OEM	Std Issue: Typ							

©Copyright 2005 ABB. All rights reserved. We reserve all rights in this document and in the information contained therein. Reproduction, use or disclosure to third parties without express authority is strictly forbidden.

-215D2

DC532
vA/cAf

DC532

I0	DI_P2_InkRollerFb	I8	DI_P2_InkRollerManSel	C16	DO_P2_InkRoller	C24	DO_P2_InkRollerLamp
I1		I9	DI_P2_InkRollerAutoSel	C17	-	C25	DO_P2_InkBladeLamp
I2	-	I10	DI_P2_InkBlade_OnCmd	C18	DO_A7_CrawlLamp	C26	DO_P2_InkBlade
I3	-	I11	-	C19	-	C27	-
I4	-	I12	-	C20	-	C28	-
I5	-	I13	DI_A2_InchForwCmd	C21	-	C29	-
I6	-	I14	DI_A2_InchRevCmd	C22	DO_A2_ReadyLamp	C30	DO_P2_SideRegSel
I7	-	I15	DI_A2_StopCmd	C23	DO_A2_SafeLamp	C31	DO_P2_CircRegSel
1.8	UP	2.8	UP	3.8	UP	4.8	UP
1.9	ZP	2.9	ZP	3.9	ZP	4.9	ZP
CH-ERR1		CH-ERR2		CH-ERR3		CH-ERR4	

P2 M1

UP 24VDC 200W

16DI 16DC
Input 24VDC
Output 24VDC 0.5A

1.0	/275.H22	2.0	/276.H4	3.0	/275.B21	4.0	/276.B9
1.1		2.1	/276.H7	3.1		4.1	/277.B7
1.2		2.2	/277.H6	3.2	/234.B19	4.2	/277.B16
1.3		2.3		3.3		4.3	
1.4		2.4		3.4		4.4	
1.5		2.5	/232.G21	3.5		4.5	
1.6		2.6	/232.G25	3.6	/232.B12	4.6	/261.B6
1.7		2.7	/232.G29	3.7	/232.B15	4.7	/266.B6
1.8	UP	2.8	UP	3.8	UP	4.8	UP
1.9	ZP	2.9	ZP	3.9	ZP	4.9	ZP

211.29 24VDC_PU2
211.29 0VDC_PU2

24VDC_PU2 216.G3
0VDC_PU2 216.G3

-215D2.1

TU516
vA/cAf

-X61 54P
-X61 50M

Issue	2008-10-15 TK	XYZ Project ID		ABB	Title:	3BHS2#####	=PU___	Page 215
Check.	2010-01-12 RePao	ABB: A-20#####	system sistema	ABBCH ATBN	in-/outputs digital printing couple	Language: EN ES	Form: A3	+PUCR	<211 >216
©ABBCH	2010-01-12 16:14	OEM: ___			entradas/salidas digital cuerpo de impresión 2				
Rev. 0	2010-01-12 RePao	Std Name: OEM	Std Issue: Typ						

-216D2

DC532
vA/cAf

DC532

I0	-	I8	-	C16	-	C24	DO_P2_Impr_DS
I1	-	I9	-	C17	-	C25	DO_P2_InchForw
I2	DI_A7_CrawlCmd	I10	DI_P2_InchClutch	C18	DO_A7_ReadyLamp	C26	DO_P2_InchRev
I3	DI_A7_WebbingUpSpeedCmd	I11	-	C19	DO_A7_SafeLamp	C27	DO_P2_InchFast
I4	DI_A7_InchForwCmd	I12	-	C20	DO_P2_InkPickUp	C28	-
I5	DI_A7_InchRevCmd	I13	-	C21	DO_P2_WaterForm	C29	DO_P2_InchClutch
I6	DI_A7_StopCmd	I14	-	C22	DO_P2_InkForm	C30	-
I7	-	I15	-	C23	DO_P2_Impr_OS	C31	-
1.8	UP	2.8	UP	3.8	UP	4.8	UP
1.9	ZP	2.9	ZP	3.9	ZP	4.9	ZP
CH-ERR1		CH-ERR2		CH-ERR3		CH-ERR4	

P2 M2

UP 24VDC 200W

16DI 16DC
Input 24VDC
Output 24VDC 0.5A

1.0		2.0		3.0		4.0	/240.B29		
1.1		2.1		3.1		4.1	/224.B20		
1.2	/234.G17	2.2	/224.F12	3.2	/234.B11	4.2	/224.B25		
1.3	/234.G7	2.3		3.3	/234.B14	4.3	/224.B30		
1.4	/234.G21	2.4		3.4	/240.B4	4.4			
1.5	/234.G24	2.5		3.5	/240.B9	4.5	/224.C2		
1.6	/234.G28	2.6		3.6	/240.B14	4.6			
1.7		2.7		3.7	/240.B24	4.7			
215.31 24VDC_PU2 1.8	UP	2.8	UP	3.8	UP	4.8	UP	24VDC_PU2	218.G3
215.31 0VDC_PU2 1.9	ZP	2.9	ZP	3.9	ZP	4.9	ZP	0VDC_PU2	218.G3

-216D2.1

TU516
vA/cAf

©Copyright 2005 ABB. All rights reserved. We reserve all rights in this document and in the information contained therein. Reproduction, use or disclosure to third parties without express authority is strictly forbidden.

Issue	2008-10-15 TK	XYZ Project ID	ABBCH ATBN	Title: in-/outputs digital printing couple	3BHS2#####	=PU___	Page 216
Check.	2010-01-12 RePao	ABB: A-20##### system		entradas/salidas digital cuerpo de impresión 2			
©ABBCH	2010-01-12 16:14	OEM: ___ sistema			Language: EN ES	Form: A3	+PUCR <215 >218
Rev. 0	2010-01-12 RePao	Std Name: OEM	Std Issue: Typ				

-218D2
DC523
vA/cAf

DC523

1.0	24V	C0	DO_P2_InkScrewMuxUp0	C8	DO_P2_InkScrewMuxDown0	C16	DO_P2_InkScrewMuxSel0
1.1	24V	C1	DO_P2_InkScrewMuxUp1	C9	DO_P2_InkScrewMuxDown1	C17	DO_P2_InkScrewMuxSel1
1.2	24V	C2	DO_P2_InkScrewMuxUp2	C10	DO_P2_InkScrewMuxDown2	C18	DO_P2_InkScrewMuxSel2
1.3	24V	C3	DO_P2_InkScrewMuxUp3	C11	DO_P2_InkScrewMuxDown3	C19	DO_P2_InkScrewMuxSel3
1.4	0V	C4	DO_P2_InkScrewMuxUp4	C12	DO_P2_InkScrewMuxDown4	C20	DO_P2_InkScrewMuxSel4
1.5	0V	C5	DO_P2_InkScrewMuxUp5	C13	DO_P2_InkScrewMuxDown5	C21	DO_P2_InkScrewMuxSel5
1.6	0V	C6	DO_P2_InkScrewMuxUp6	C14	DO_P2_InkScrewMuxDown6	C22	DO_P2_InkScrewMuxSel6
1.7	0V	C7	DO_P2_InkScrewMuxUp7	C15	DO_P2_InkScrewMuxDown7	C23	DO_P2_InkScrewMuxSel7
1.8	UP	2.8	UP	3.8	UP	4.8	UP
1.9	ZP	2.9	ZP	3.9	ZP	4.9	ZP
CH-ERR1		CH-ERR2		CH-ERR3		CH-ERR4	

P2 M3

UP 24VDC 300W

24DC
Input 24VDC
Output 24VDC 0.5A

1.0		2.0	/270.C3	3.0	/270.C4	4.0	/270.C21
1.1		2.1	/270.C5	3.1	/270.C6	4.1	/270.C22
1.2		2.2	/270.C7	3.2	/270.C7	4.2	/270.C22
1.3		2.3	/270.C8	3.3	/270.C9	4.3	/270.C23
1.4		2.4	/270.C10	3.4	/270.C11	4.4	/270.C24
1.5		2.5	/270.C12	3.5	/270.C12	4.5	/270.C25
1.6		2.6	/270.C13	3.6	/270.C14	4.6	/270.C26
1.7		2.7	/270.C15	3.7	/270.C16	4.7	/270.C27
1.8	UP	2.8	UP	3.8	UP	4.8	UP
1.9	ZP	2.9	ZP	3.9	ZP	4.9	ZP

216.31 24VDC_PU2
216.31 0VDC_PU2

24VDC_PU2 219.G3
0VDC_PU2 219.G3

-218D2.1

TU516
vA/cAf

©Copyright 2005 ABB. All rights reserved. We reserve all rights in this document and in the information contained therein. Reproduction, use or disclosure to third parties without express authority is strictly forbidden.

Issue	2008-10-15 TK	XYZ Project ID	ABBCH ATBN	Title: in-/outputs digital ink unit	3BHS2#####	=PU___	Page 218
Check.	2010-01-12 RePao	ABB: A-20##### system		entradas/salidas digital mecanismo entintador 2	Language: EN ES	Form: A3	
©ABBCH	2010-01-12 16:14	OEM: ___ sistema				+PUCR	<216 >219
Rev. 0	2010-01-12 RePao	Std Name: OEM Std Issue: Typ					

-219D3

AX522
vA/cAf

AX522

I0-	-	I0+	AI_P2_InkscrewMuxAv0	O0-	-	O0+	AO_P2_InkRollerSpeedSv
I1-	-	I1+	AI_P2_InkscrewMuxAv1	O1-	-	O1+	-
I2-	-	I2+	AI_P2_InkscrewMuxAv2	O2-	-	O2+	-
I3-	-	I3+	AI_P2_InkscrewMuxAv3	O3-	-	O3+	-
I4-	-	I4+	AI_P2_InkscrewMuxAv4	O4-	-	O4+	-
I5-	-	I5+	AI_P2_InkscrewMuxAv5	O5-	-	O5+	-
I6-	-	I6+	AI_P2_InkscrewMuxAv6	O6-	-	O6+	-
I7-	-	I7+	AI_P2_InkscrewMuxAv7	O7-	-	O7+	-
1.8	UP	2.8	UP	3.8	UP	4.8	UP
1.9	ZP	2.9	ZP	3.9	ZP	4.9	ZP
		CH-ERR2				CH-ERR4	

P2 M4

UP 24VDC 5W

8AI 8AO
Analog Input
Analog Output

1.0	/270.G20	2.0	/270.G20	3.0	/275.B17	4.0	/275.B17
1.1	/270.G21	2.1	/270.G21	3.1		4.1	
1.2	/270.G22	2.2	/270.G22	3.2		4.2	
1.3	/270.G23	2.3	/270.G23	3.3		4.3	
1.4	/270.G24	2.4	/270.G24	3.4		4.4	
1.5	/270.G24	2.5	/270.G24	3.5		4.5	
1.6	/270.G25	2.6	/270.G25	3.6		4.6	
1.7	/270.G26	2.7	/270.G26	3.7		4.7	
1.8	UP	2.8	UP	3.8	UP	4.8	UP
1.9	ZP	2.9	ZP	3.9	ZP	4.9	ZP

218.31 24VDC_PU2
218.31 0VDC_PU2

-219D3.1

TU516
vA/cAf

©Copyright 2005 ABB. All rights reserved. We reserve all rights in this document and in the information contained therein. Reproduction, use or disclosure to third parties without express authority is strictly forbidden.

Issue	2008-10-15 TK	XYZ Project ID	ABBCH ATBN	Title: in-/outputs entradas/salidas	analog analógico	ink unit mecanismo entintador 2	3BHS2#####	=PU___	Page 219
Check.	2010-01-12 RePao	ABB: A-20##### system sistema					Language: EN ES	Form: A3	+PUCR
©ABBCH	2010-01-12 16:14	OEM: ___							<218 >224
Rev. 0	2010-01-12 RePao	Std Name: OEM	Std Issue: Typ						

©Copyright 2005 ABB. All rights reserved. We reserve all rights in this document and in the information contained therein. Reproduction, use or disclosure to third parties without express authority is strictly forbidden.

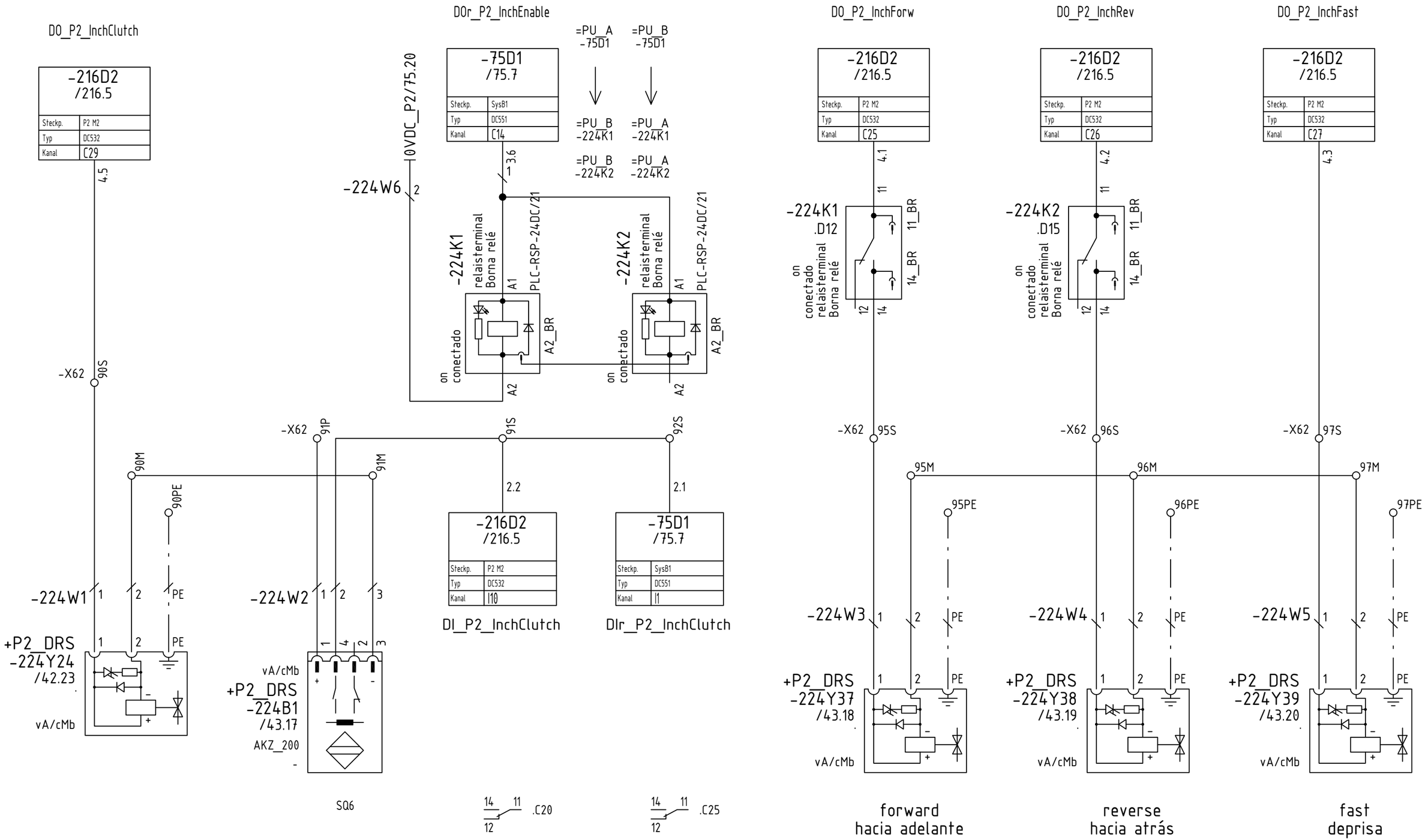

Issue	2008-10-15 TK	XYZ Project ID		ABBCH ATBN	Title: printing unit / unidad de impresión — clutch / embrague	3BHS2#####	=PU___	Page 224
Check.	2010-01-12 RePao	ABB: A-20#####	system / sistema					
©ABBCH	2010-01-12 16:14	OEM: ___				Language: EN ES	Form: A3	+PUCR	<219 >232
Rev. 0	2010-01-12 RePao	Std Name: OEM	Std Issue: Typ					

©Copyright 2005 ABB. All rights reserved. We reserve all rights in this document and in the information contained therein. Reproduction, use or disclosure to third parties without express authority is strictly forbidden.

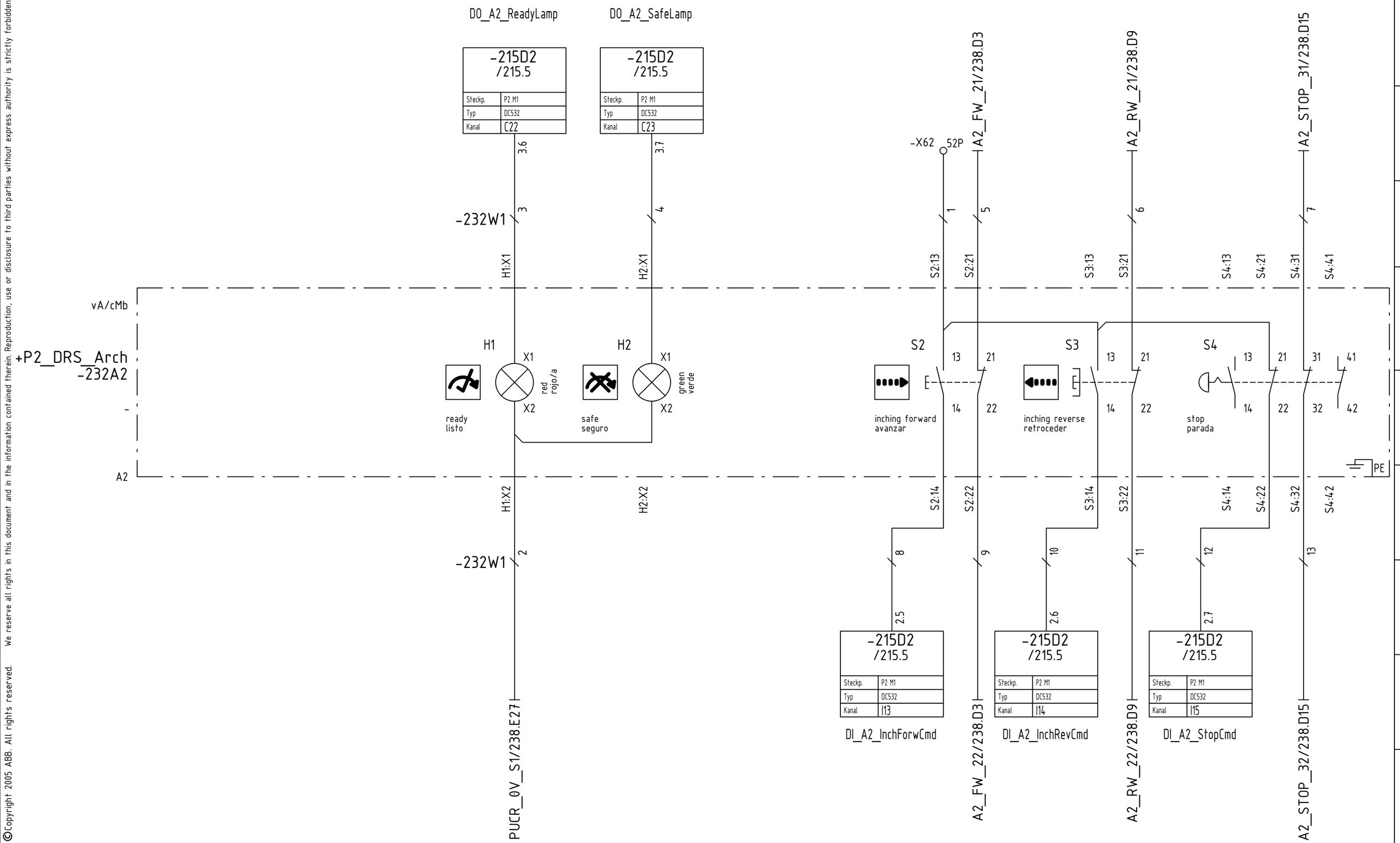

Issue	2008-10-15 TK	XYZ Project ID	ABB ABBCH ATBN	Title: control station / panel de mando A2	drive side (side II) / Lado de accionamientos (lado 2)	tunnel / tunel	3BHS2#####
Check.	2010-01-12 RePao	ABB: A-20#####					=PU___
©ABBCH	2010-01-12 16:14	OEM: ___ system / sistema					Page 232
Rev. 0	2010-01-12 RePao	Std Name: OEM	Std Issue: Typ		Language: EN ES	Form: A3	+PUCR
							<224 >234

©Copyright 2005 ABB. All rights reserved. We reserve all rights in this document and in the information contained therein. Reproduction, use or disclosure to third parties without express authority is strictly forbidden.

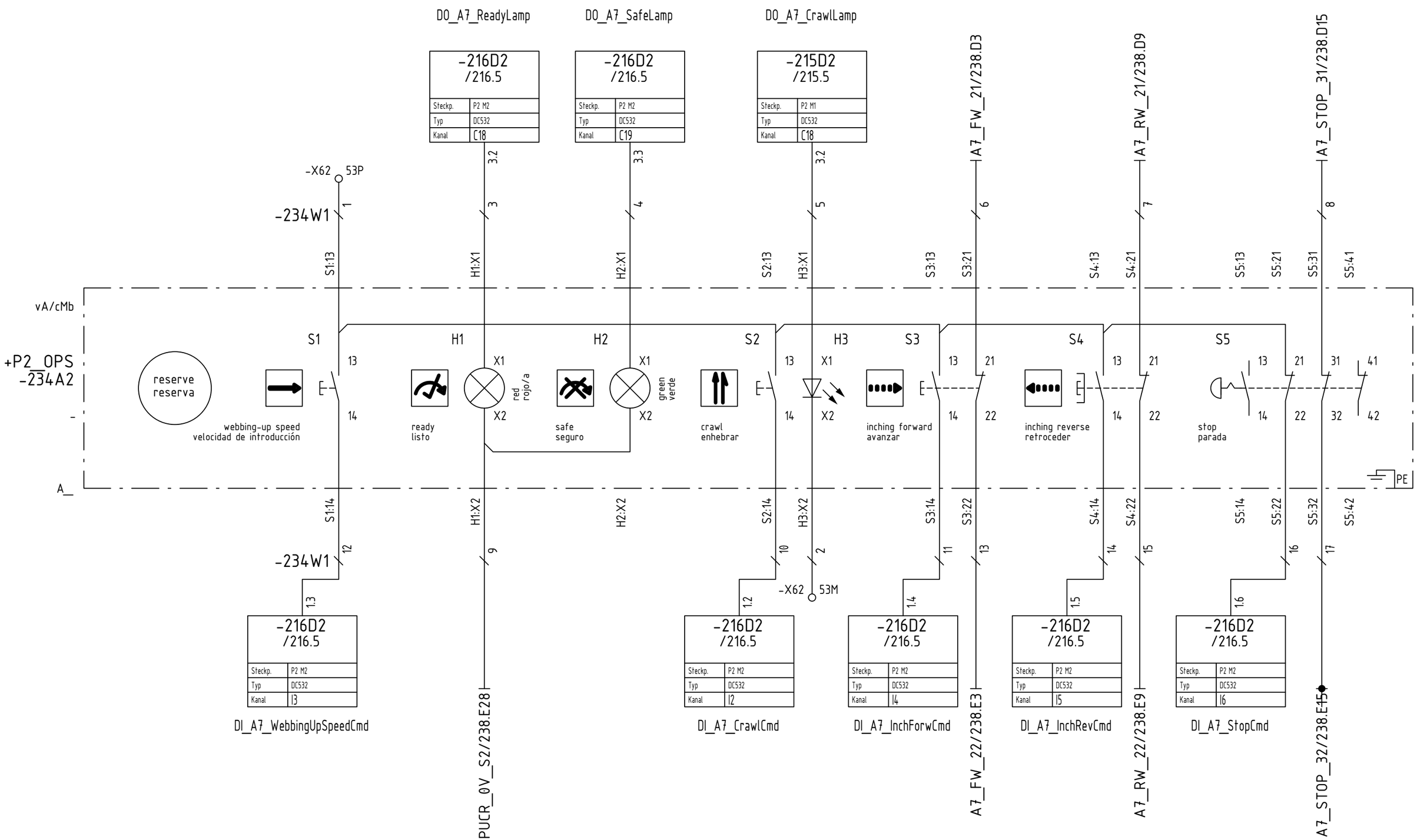

Issue	2008-10-15 TK	XYZ Project ID	ABB ATBN	Title: control station / panel de mando A7 — operator side / por el lado del usuario	3BHS2#####
Check.	2010-01-12 RePao	ABB: A-20#####			=PU___
©ABBCH	2010-01-12 16:14	OEM: ___ system / sistema			Page 234
Rev. 0	2010-01-12 RePao	Std Name: OEM Std Issue: Typ		Language: EN ES Form: A3	+PUCR <232 >238

©Copyright 2005 ABB. All rights reserved. We reserve all rights in this document and in the information contained therein. Reproduction, use or disclosure to third parties without express authority is strictly forbidden.

DOr_0V_Enable_Lamps_PUCR

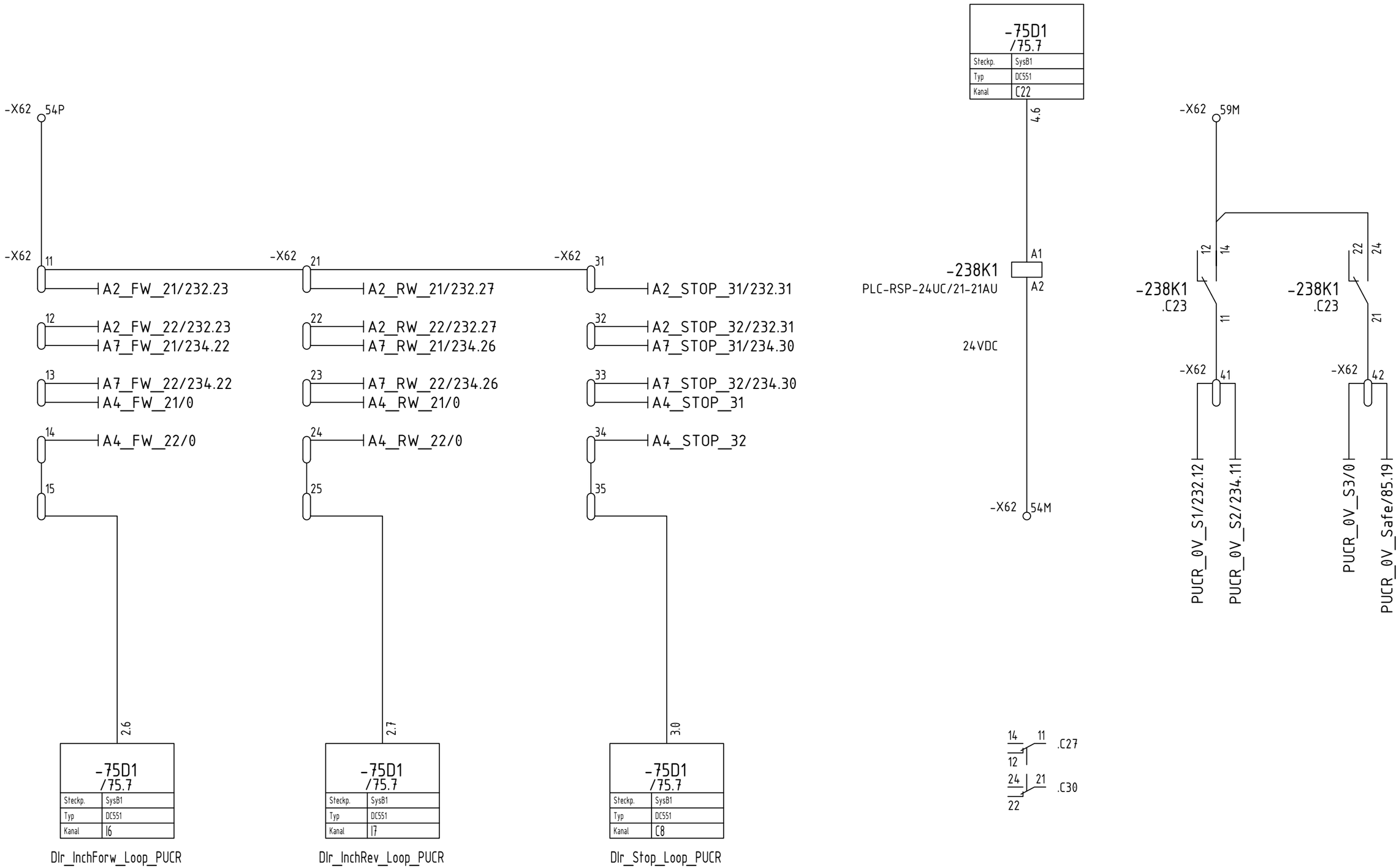

DIr_InchForw_Loop_PUCR

DIr_InchRev_Loop_PUCR

DIr_Stop_Loop_PUCR

Issue	2008-10-27 TK	XYZ Project ID	ABB	Title: control station / panel de mando	signal / señal	Forward / Reverse / adelante / atrás	3BHS2#####	=PU___	Page 238
Check.	2010-01-12 RePao	ABB: A-20#####	ABBCH ATBN				Language: EN ES	Form: A3	+PUCR	<234 >240
©ABBCH	2010-01-12 16:14	OEM: ___ system / sistema								
Rev. 0	2010-01-12 RePao	Std Name: OEM	Std Issue: Typ							

©Copyright 2005 ABB. All rights reserved. We reserve all rights in this document and in the information contained therein. Reproduction, use or disclosure to third parties without express authority is strictly forbidden.

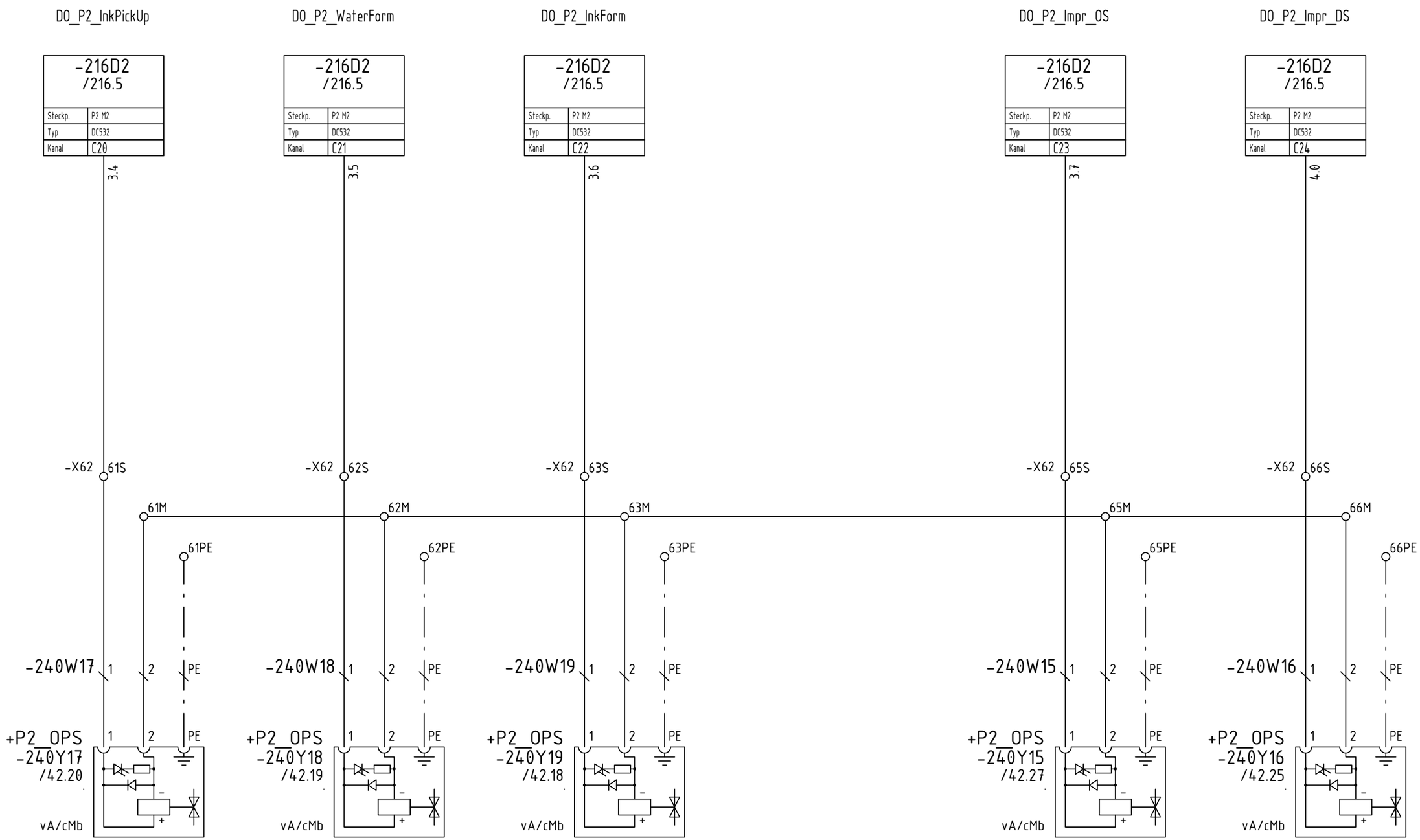

Issue	2008-10-15 TK	XYZ Project ID	.	ABBCH ATBN	Title: solenoid valve / válvula solenoidal — OPS	3BHS2#####	=PU___	Page 240
Check.	2010-01-12 RePao	ABB: A-20#####	system / sistema			Language: EN ES	Form: A3	+PUCR	<238 >260
©ABBCH	2010-01-12 16:14	OEM: ___							
Rev. 0	2010-01-12 RePao	Std Name: OEM	Std Issue: Typ						

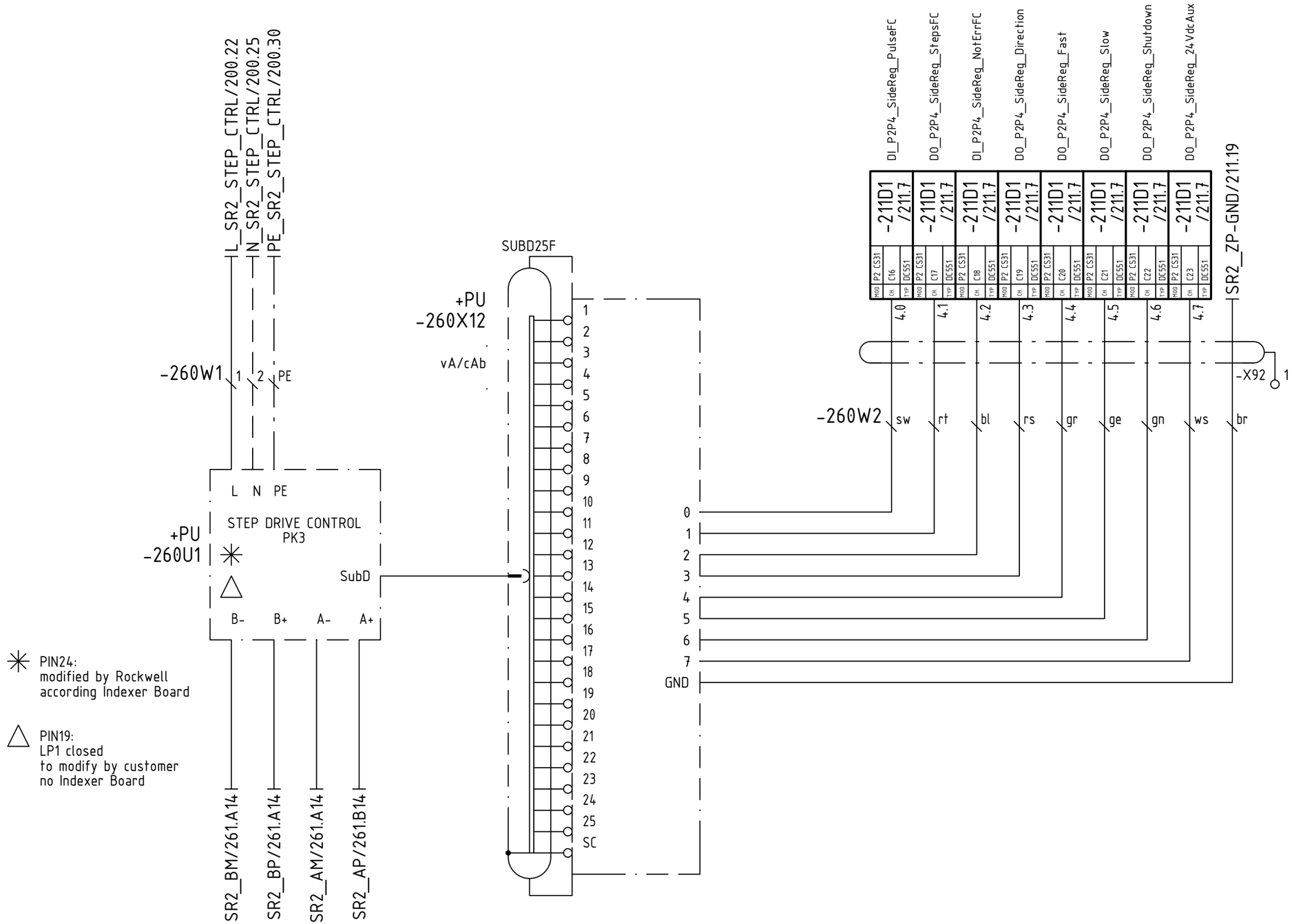

©Copyright 2005 ABB. All rights reserved. We reserve all rights in this document and in the information contained therein. Reproduction, use or disclosure to third parties without express authority is strictly forbidden.

Issue	2008-11-06 TK	XYZ Project ID	ABBCH ATBN	Title: side register / registro lateral	control / control	ParkerDrive PK3	3BHS2#####
Check.	2010-01-12 RePao	ABB: A-20#####					=PU___
©ABBCH	2010-01-12 16:14	OEM: ___	system / sistema				Page 260
Rev. 0	2010-01-12 RePao	Std Name: OEM	Std Issue: Typ			Language: EN ES	Form: A3
							+PUCR
							<240 >261

©Copyright 2005 ABB. All rights reserved. We reserve all rights in this document and in the information contained therein. Reproduction, use or disclosure to third parties without express authority is strictly forbidden.

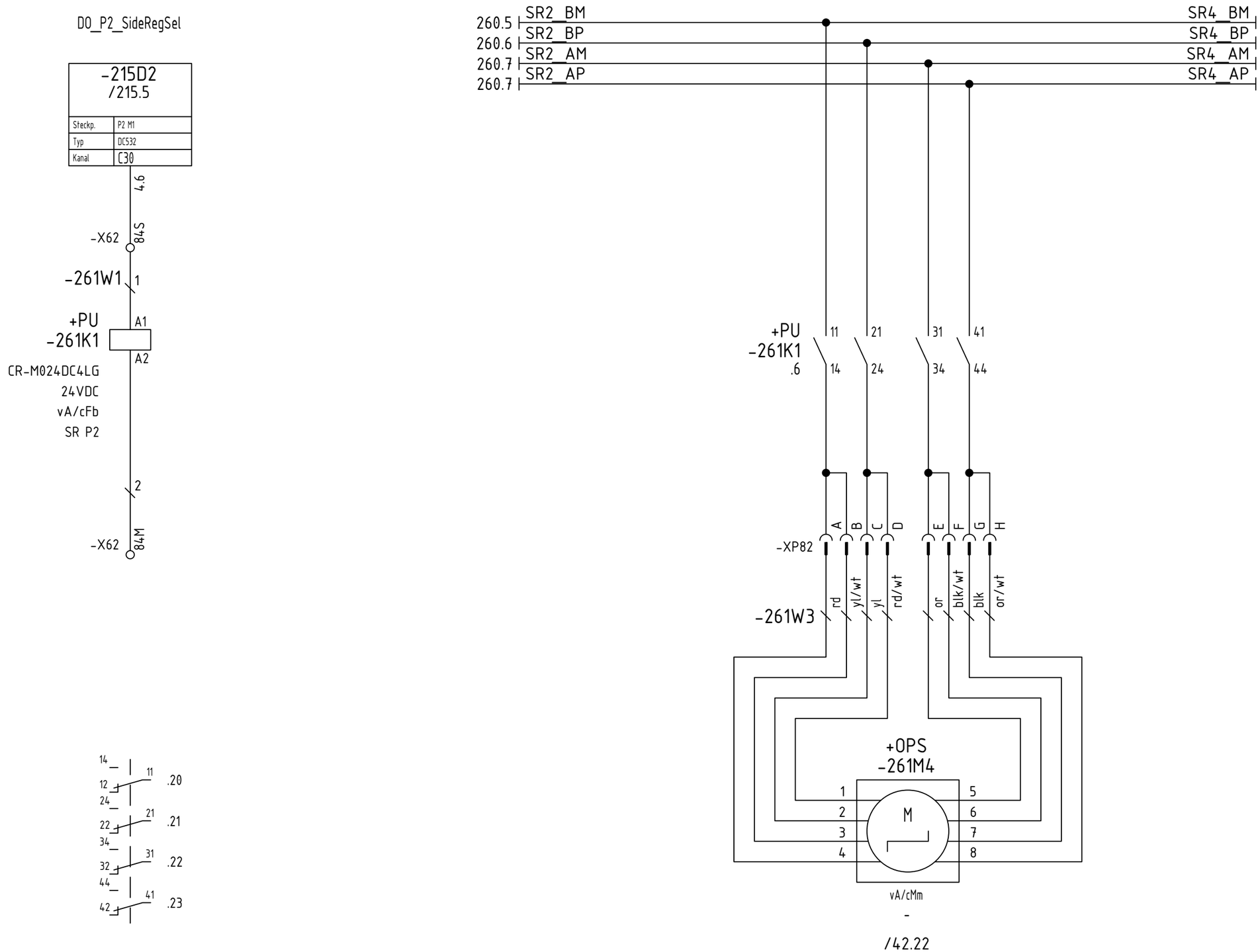

Issue	2008-11-06 TK	XYZ Project ID		ABB ABBCH ATBN	Title: side register / registro lateral — motor / motor	3BHS2#####	=PU___	Page 261
Check.	2010-01-12 RePao	ABB: A-20#####	system / sistema					
©ABBCH	2010-01-12 16:14	OEM: ___				Language: EN ES	Form: A3	+PUCR
Rev. 0	2010-01-12 RePao	Std Name: OEM	Std Issue: Typ					<260 >265

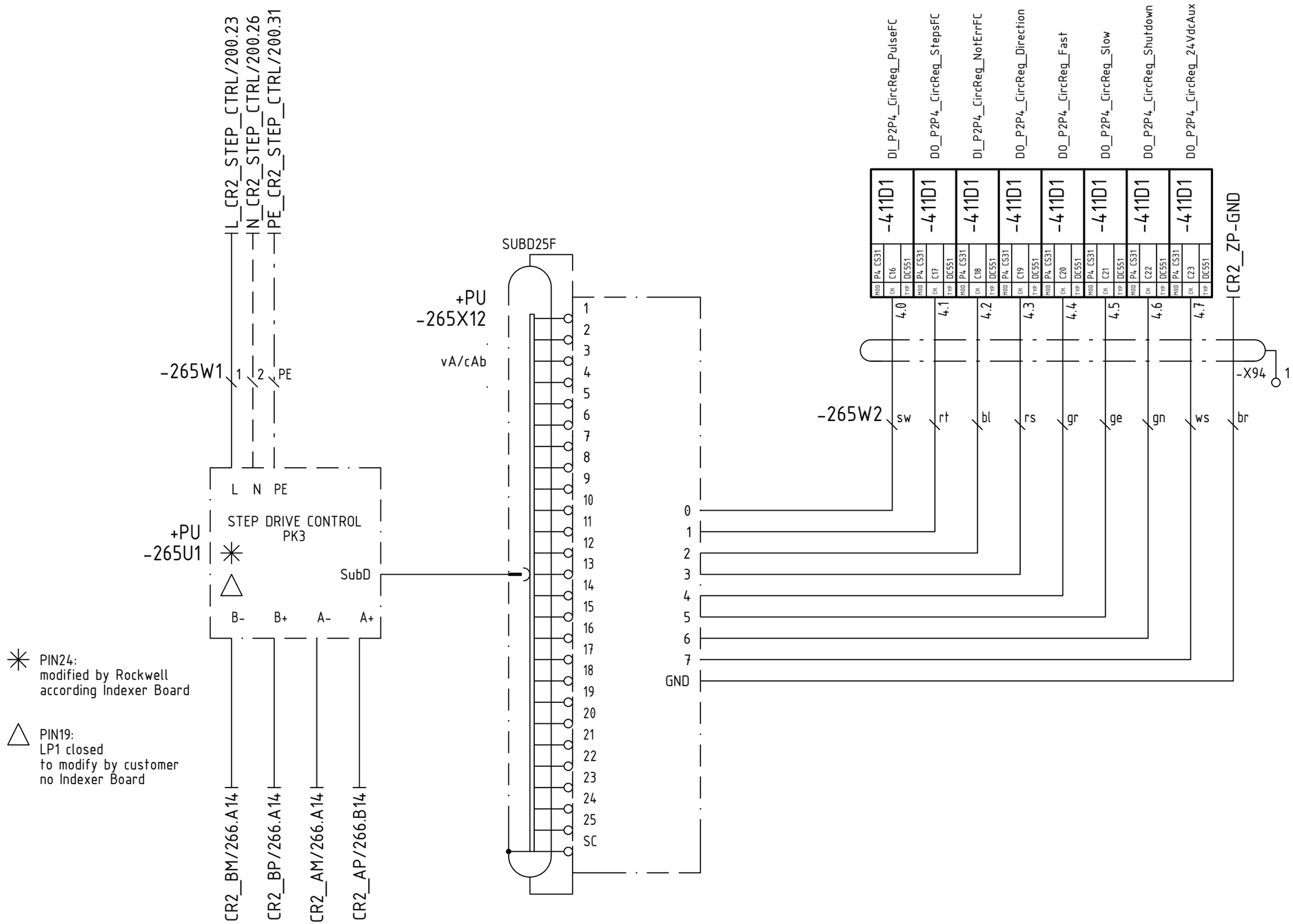

©Copyright 2005 ABB. All rights reserved. We reserve all rights in this document and in the information contained therein. Reproduction, use or disclosure to third parties without express authority is strictly forbidden.

Issue	2008-11-06 TK	XYZ Project ID	ABBCH ATBN	Title: circumferential register control / registro circunferencial control — ParkerDrive PK3	3BHS2#####
Check.	2010-01-12 RePao	ABB: A-20#####			=PU___
©ABBCH	2010-01-12 16:14	OEM: ___	system / sistema		Page 265
Rev. 0	2010-01-12 RePao	Std Name: OEM	Std Issue: Typ	Language: EN ES	Form: A3
				+PUCR	<261 >266

©Copyright 2005 ABB. All rights reserved. We reserve all rights in this document and in the information contained therein. Reproduction, use or disclosure to third parties without express authority is strictly forbidden.

DO_P2_CircRegSel

-215D2
/215.5

Steckp.	P2 M1
Typ	DC532
Kanal	C31

4.7

-X62 89S

-261W1 3

+PU
-266K1 A1 A2

CR-M024DC4LG
24VDC
vA/cFb
CR P2

4

-X62 89M

265.5 CR2_BM — CR4_BM
265.6 CR2_BP — CR4_BP
265.7 CR2_AM — CR4_AM
265.7 CR2_AP — CR4_AP

+PU
-266K1
.D6

11 14
21 24
31 34
41 44

-266W1 ws br gn ge

+DRS
-266M5

1 2 3 4

M

vA/cMm
-
/43.22

14 12 11 .D20
24 22 21 .D21
34 32 31 .D22
44 42 41 .D22

Issue	2008-11-06 TK	XYZ Project ID		Title: circumferential register motor / registro circunferencial motor	3BHS2#####	=PU___	Page 266
Check.	2010-01-12 RePao	ABB: A-20#####	system / sistema		Language: EN ES	Form: A3	+PUCR	<265 >270
©ABBCH	2010-01-12 16:14	OEM: ___					
Rev. 0	2010-01-12 RePao	Std Name: OEM	Std Issue: Typ	ABBCH ATBN			

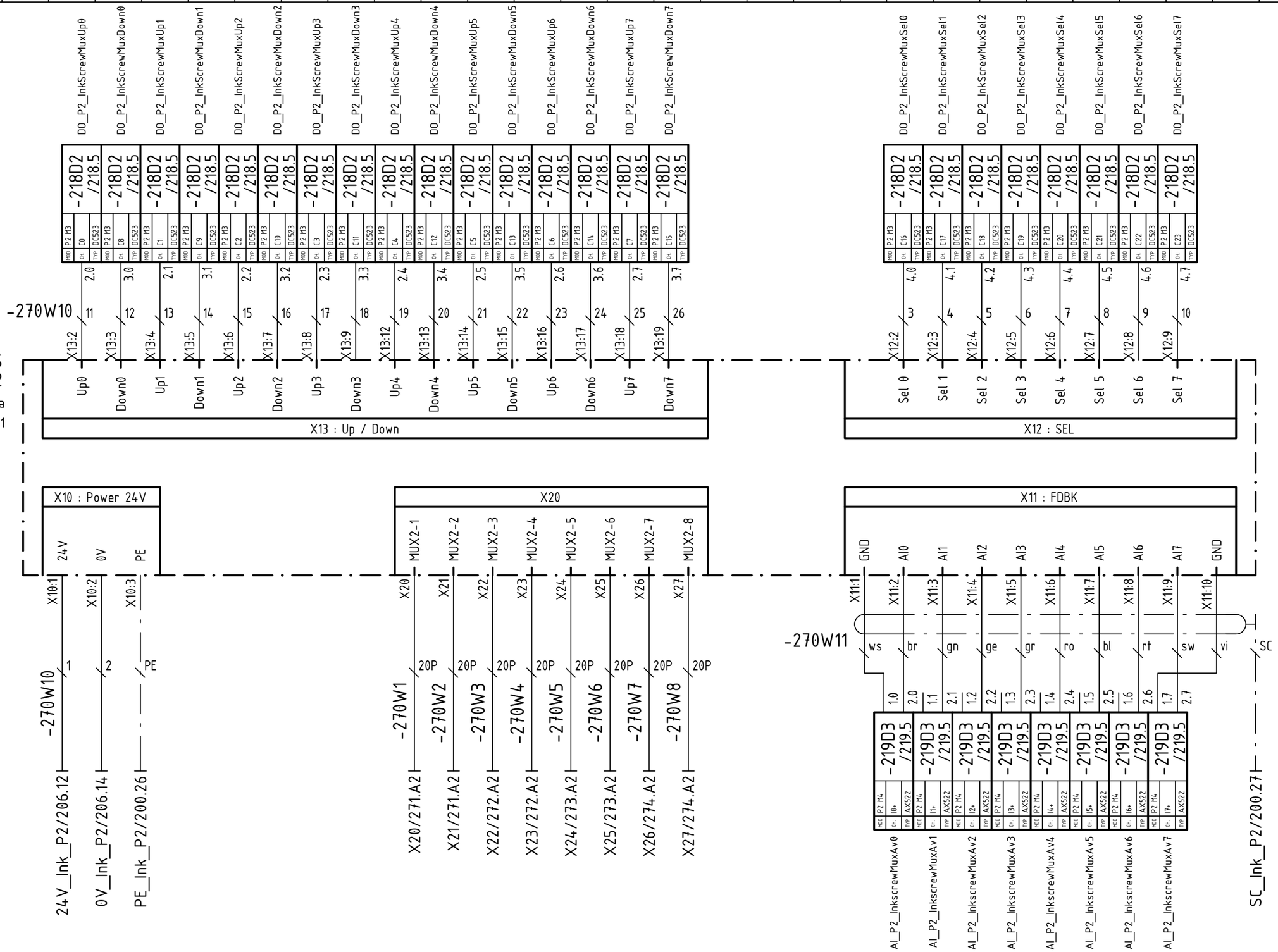

©Copyright 2005 ABB. All rights reserved. We reserve all rights in this document and in the information contained therein. Reproduction, use or disclosure to third parties without express authority is strictly forbidden.

Issue	2008-10-15 TK	XYZ Project ID	ABBCH ATBN	Title: printing couple / cuerpo de impresión	ink screws / Tornillos de tinta	Device MUX1	3BHS2#####	=PU___	Page 270
Check.	2010-01-12 RePao	ABB: A-20#####							
©ABBCH	2010-01-12 16:14	OEM: ___	system / sistema				Language: EN ES	Form: A3	+PUCR	<266 >271
Rev. 0	2010-01-12 RePao	Std Name: OEM	Std Issue: Typ						

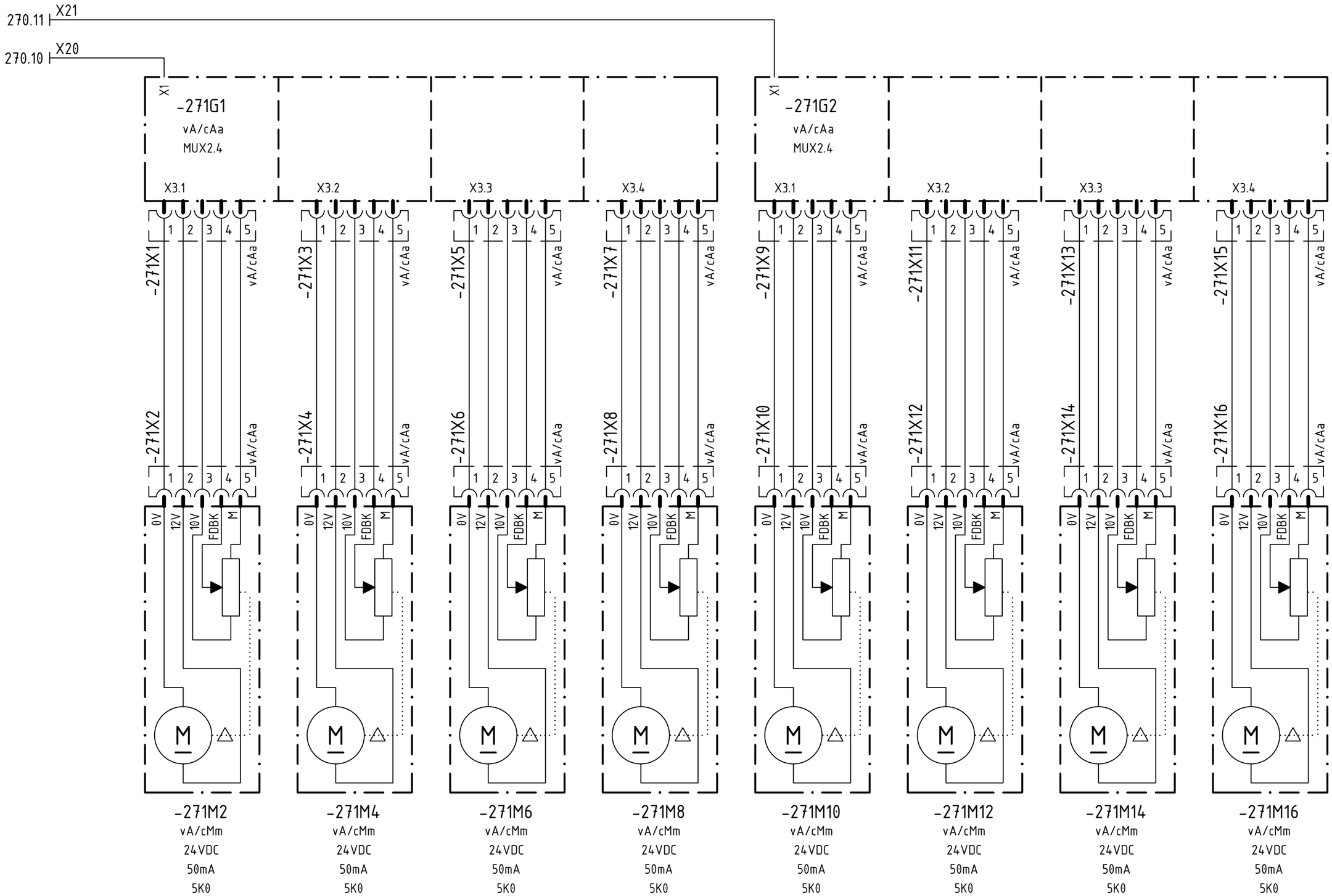

©Copyright 2005 ABB. All rights reserved. We reserve all rights in this document and in the information contained therein. Reproduction, use or disclosure to third parties without express authority is strictly forbidden.

Issue	2008-10-15 TK	XYZ Project ID	ABBCH ATBN	Title: printing couple / cuerpo de impresión; ink screws / Tornillos de tinta; ink zone / zona de tinta A	3BHS2#####
Check.	2010-01-12 RePao	ABB: A-20#####			=PU___
©ABBCH	2010-01-12 16:14	OEM: ___ system / sistema			Page 271
Rev. 0	2010-01-12 RePao	Std Name: OEM Std Issue: Typ		Language: EN ES Form: A3	+PUCR <270 >272

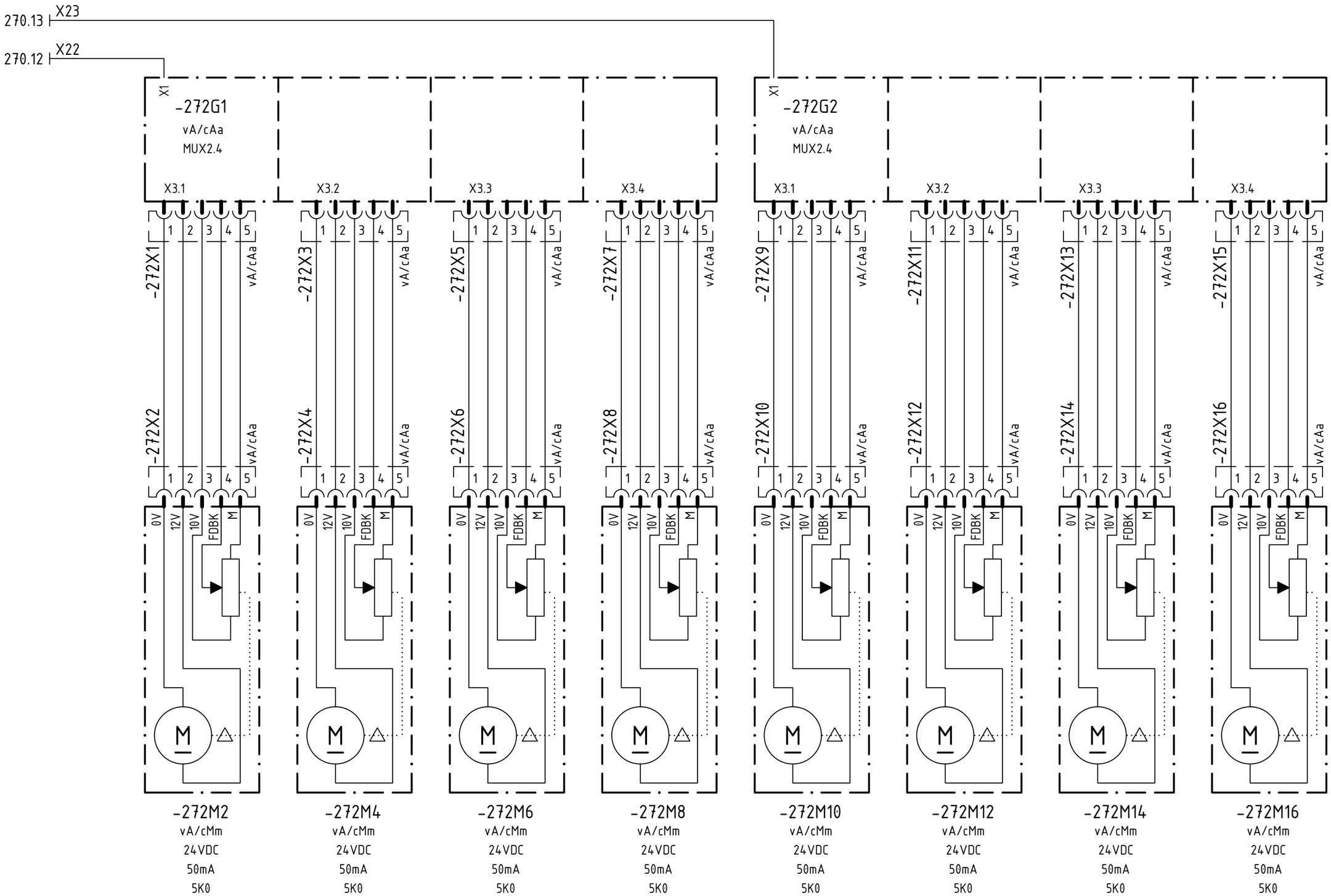

©Copyright 2005 ABB. All rights reserved. We reserve all rights in this document and in the information contained therein. Reproduction, use or disclosure to third parties without express authority is strictly forbidden.

Issue	2008-10-15 TK	XYZ Project ID	ABBCH ATBN	Title: printing couple / cuerpo de impresión; ink screws / Tornillos de tinta; ink zone / zona de tinta B	3BHS2#####
Check.	2010-01-12 RePao	ABB: A-20#####			=PU___
©ABBCH	2010-01-12 16:14	OEM: ___ system / sistema			Page 272
Rev. 0	2010-01-12 RePao	Std Name: OEM Std Issue: Typ		Language: EN ES Form: A3	+PUCR <271 >273

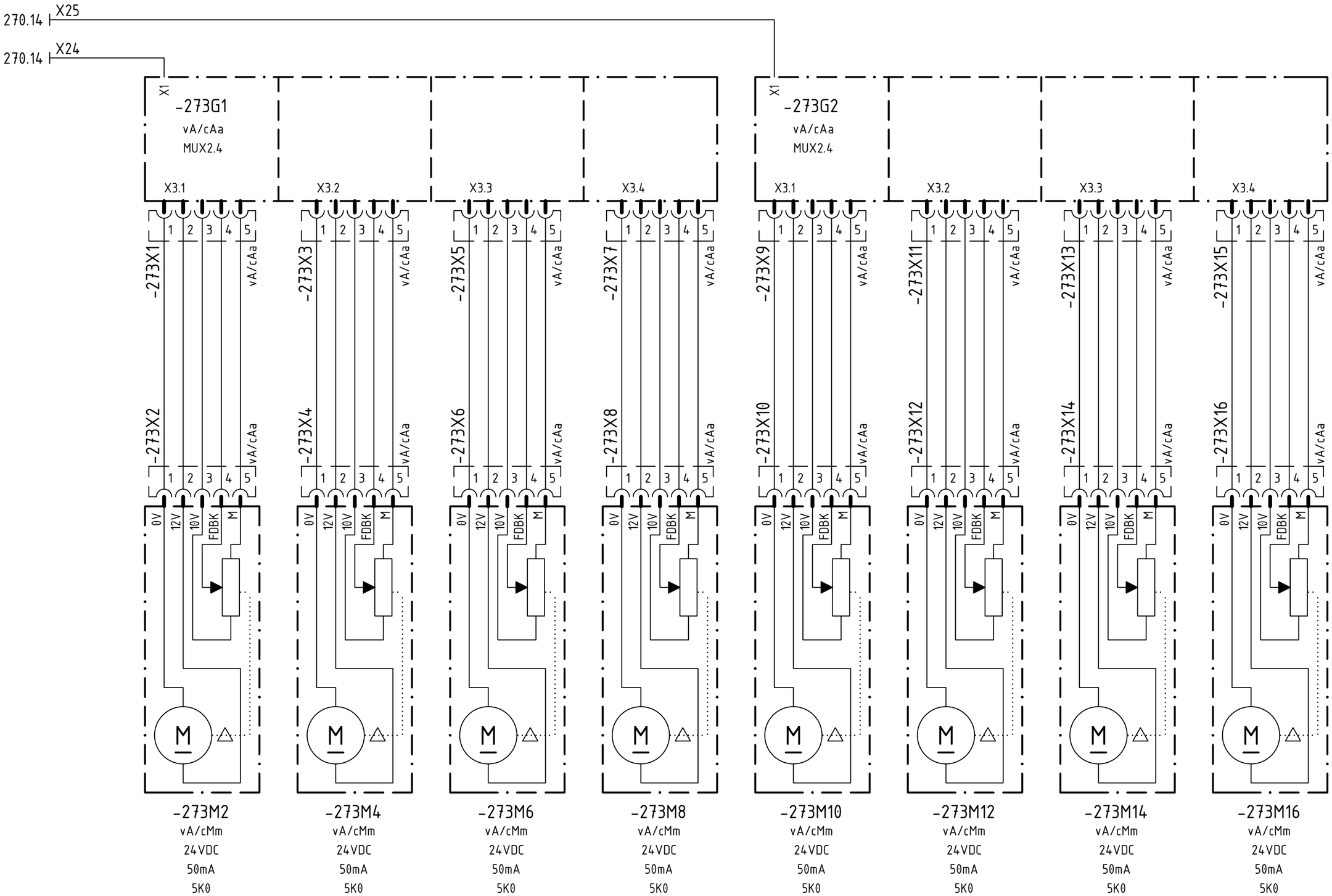

©Copyright 2005 ABB. All rights reserved. We reserve all rights in this document and in the information contained therein. Reproduction, use or disclosure to third parties without express authority is strictly forbidden.

Issue	2008-10-15 TK	XYZ Project ID	ABBCH ATBN	Title: printing couple / cuerpo de impresión; ink screws / Tornillos de tinta; ink zone / zona de tinta C	3BHS2#####
Check.	2010-01-12 RePao	ABB: A-20#####			=PU___
©ABBCH	2010-01-12 16:14	OEM: ___ system / sistema			Page 273
Rev. 0	2010-01-12 RePao	Std Name: OEM Std Issue: Typ		Language: EN ES Form: A3	+PUCR <272 >274

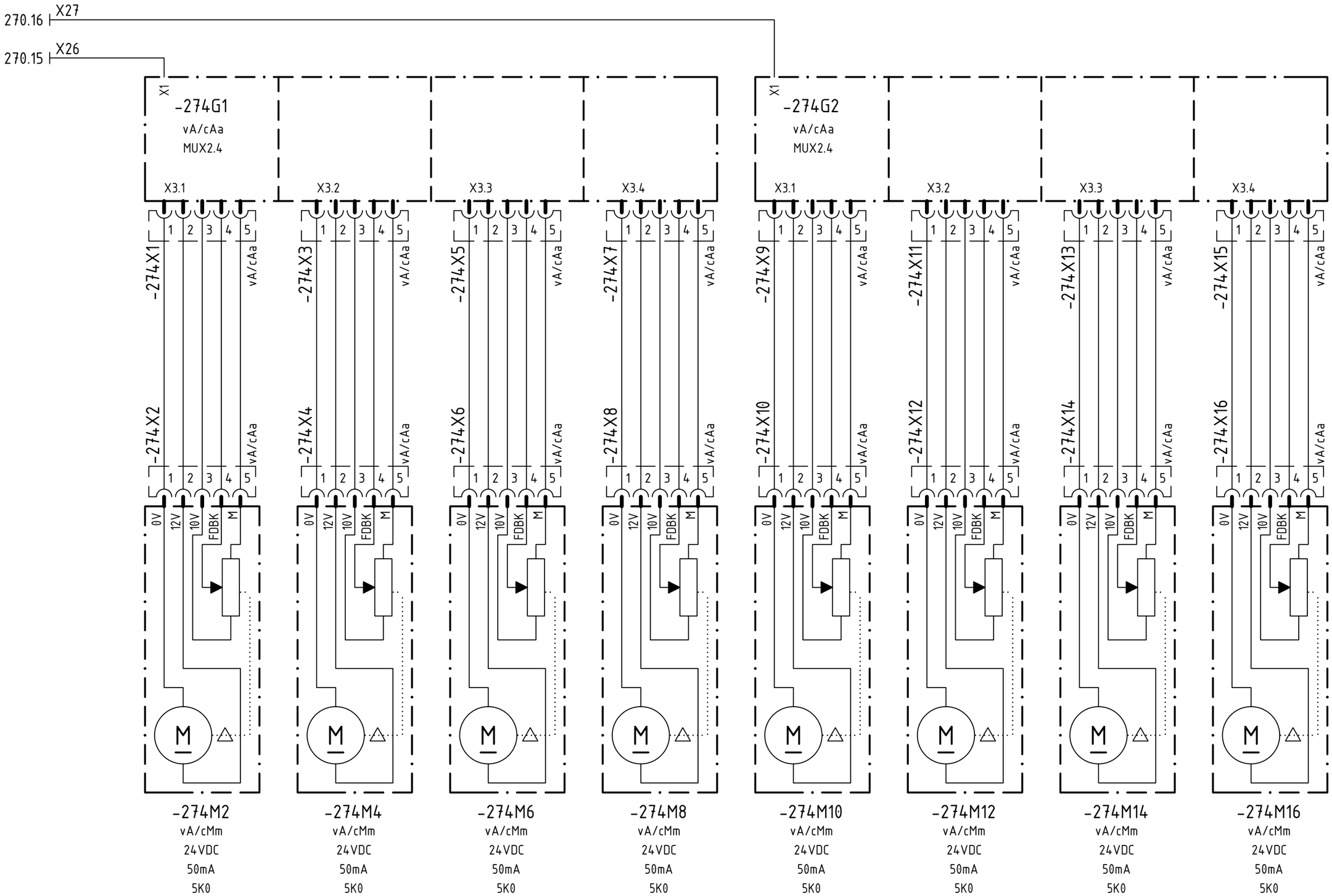

©Copyright 2005 ABB. All rights reserved. We reserve all rights in this document and in the information contained therein. Reproduction, use or disclosure to third parties without express authority is strictly forbidden.

Issue	2008-10-15 TK	XYZ Project ID	ABBCH ATBN	Title: printing couple / cuerpo de impresión; ink screws / Tornillos de tinta; ink zone / zona de tinta D	3BHS2#####
Check.	2010-01-12 RePao	ABB: A-20#####			=PU___
©ABBCH	2010-01-12 16:14	OEM: ___ system / sistema			Page 274
Rev. 0	2010-01-12 RePao	Std Name: OEM Std Issue: Typ			Language: EN ES Form: A3
					+PUCR
					<273 >275

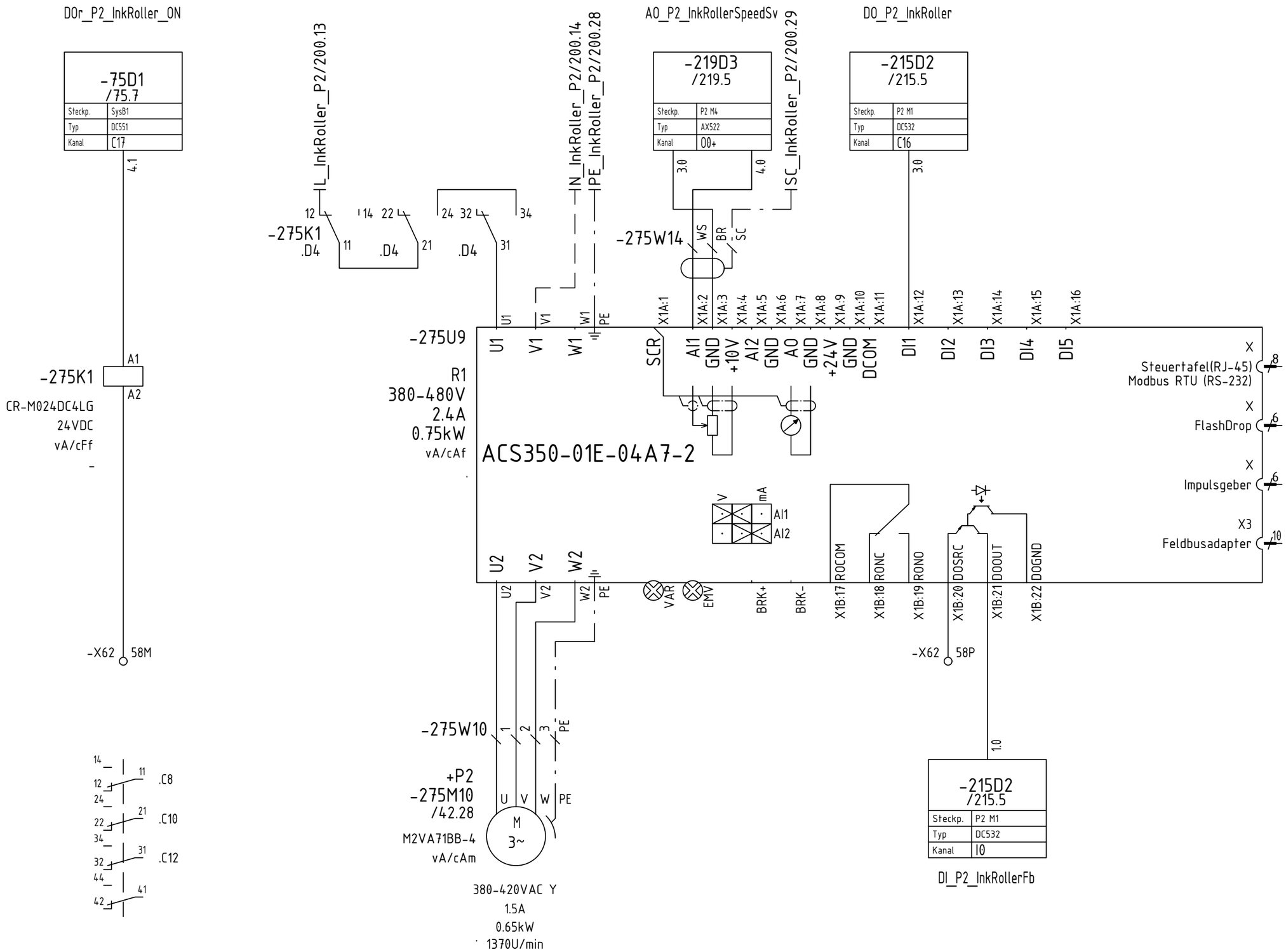

©Copyright 2005 ABB. All rights reserved. We reserve all rights in this document and in the information contained therein. Reproduction, use or disclosure to third parties without express authority is strictly forbidden.

Issue	2008-10-15 TK	XYZ Project ID	ABBCH ATBN	Title: printing couple / cuerpo de impresión — ink-fountain roller / cilindro del tintero	3BHS2#####
Check.	2010-01-12 RePao	ABB: A-20#####			=PU___
©ABBCH	2010-01-12 16:14	OEM: ___ system / sistema			Page 275
Rev. 0	2010-01-12 RePao	Std Name: OEM Std Issue: Typ		Language: EN ES Form: A3	+PUCR <274 >276

DO_P2_InkRollerLamp

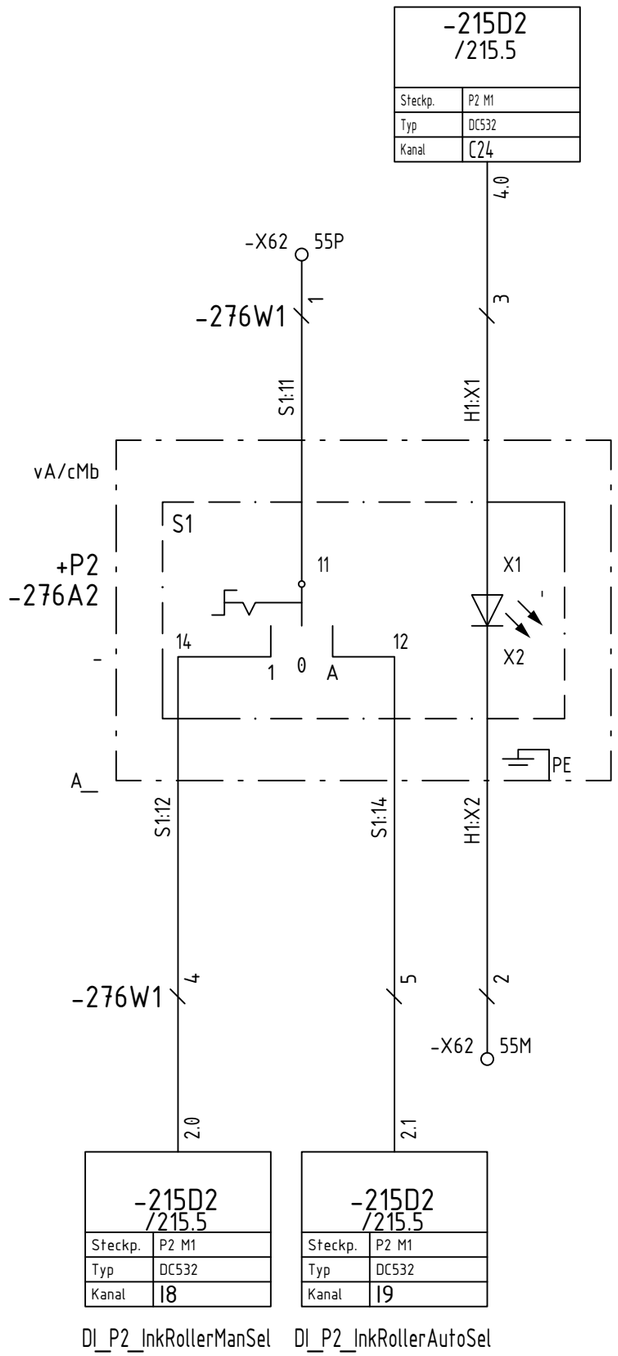

©Copyright 2005 ABB. All rights reserved. We reserve all rights in this document and in the information contained therein. Reproduction, use or disclosure to third parties without express authority is strictly forbidden.

Issue	2008-10-23 TK	XYZ Project ID	ABBCH ATBN	Title: printing couple / cuerpo de impresión; ink-fountain roller / cilindro del tintero; control station / panel de mando	3BHS2#####
Check.	2010-01-12 RePao	ABB: A-20#####			=PU___
©ABBCH	2010-01-12 16:14	OEM: ___ system / sistema			Page 276
Rev. 0	2010-01-12 RePao	Std Name: OEM Std Issue: Typ		Language: EN ES Form: A3	+PUCR <275 >277

©Copyright 2005 ABB. All rights reserved. We reserve all rights in this document and in the information contained therein. Reproduction, use or disclosure to third parties without express authority is strictly forbidden.

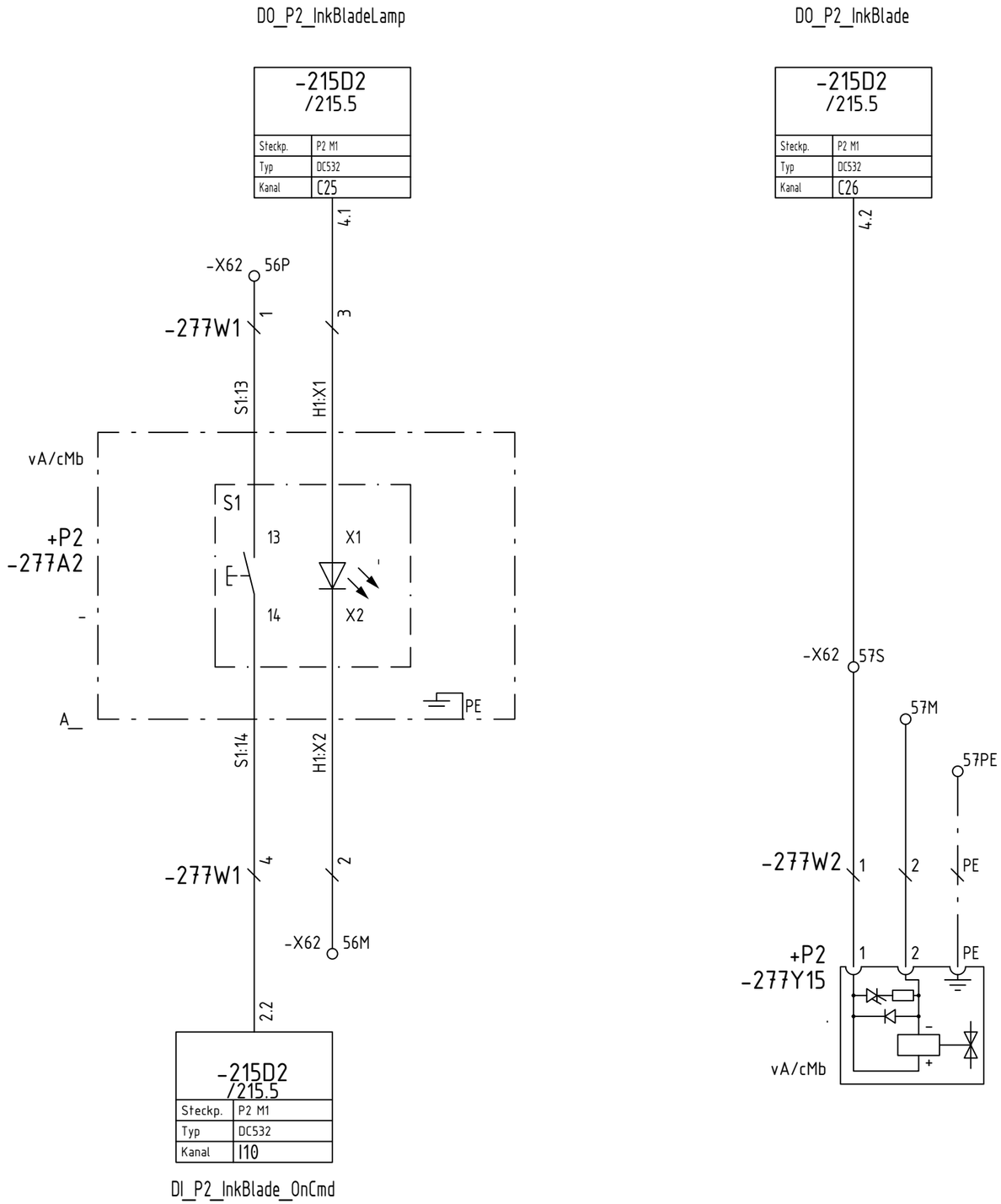

Issue	2008-10-23 TK	XYZ Project ID		ABBCH ATBN	Title: printing couple / cuerpo de impresión	ink-fountain roller / cilindro del tintero	ductor blade holder / barra de racleta
Check.	2010-01-12 RePao	ABB: A-20#####	system / sistema				
©ABBCH	2010-01-12 16:14	OEM: ___					
Rev. 0	2010-01-12 RePao	Std Name: OEM	Std Issue: Typ				

3BHS2#####	=PU___	Page 277	
Language: EN ES	Form: A3	+PUCR	<276 >280

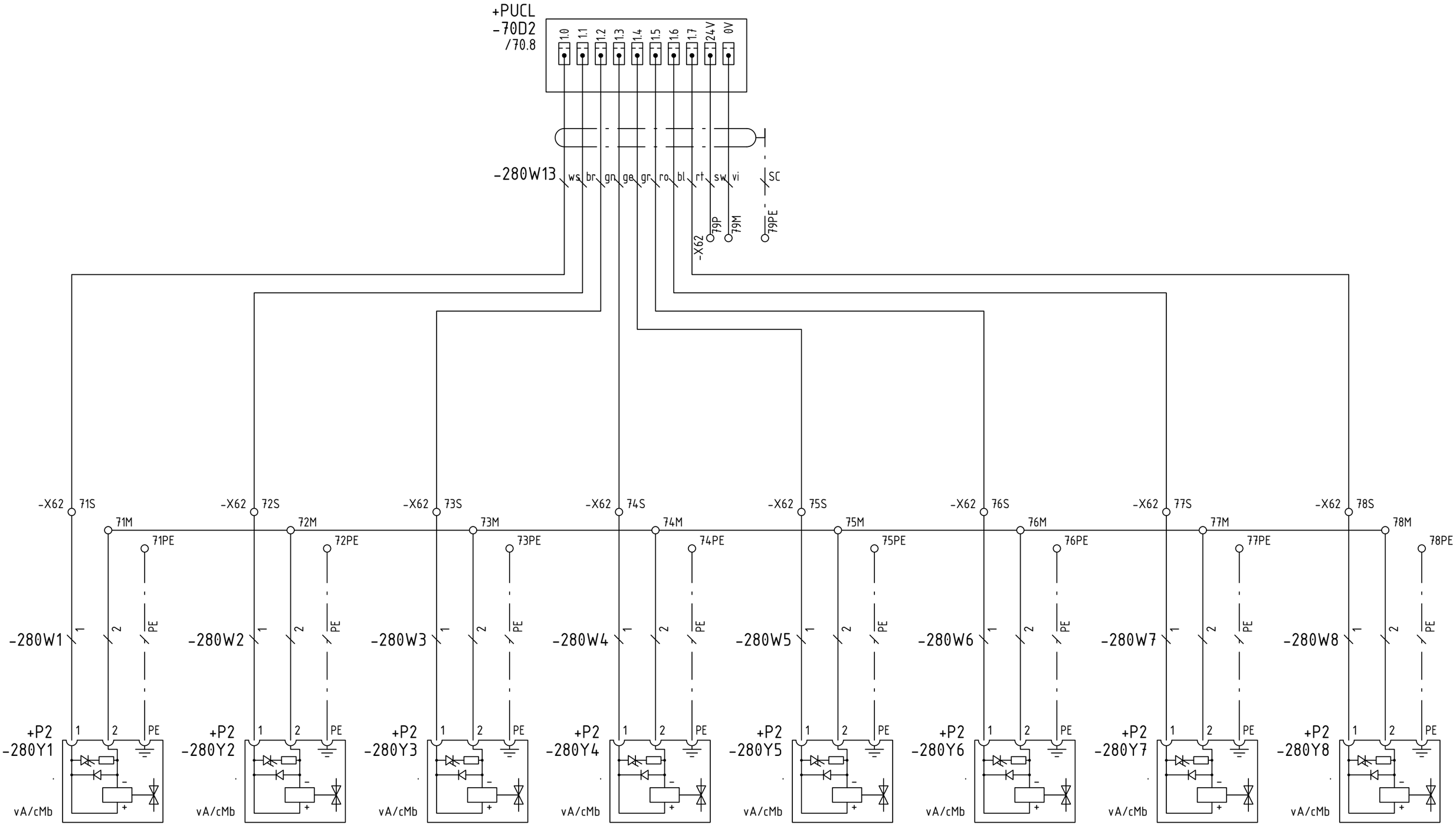

©Copyright 2005 ABB. All rights reserved. We reserve all rights in this document and in the information contained therein. Reproduction, use or disclosure to third parties without express authority is strictly forbidden.

Issue	2008-10-15 TK	XYZ Project ID	ABBCH ATBN	Title: spray bar barra de pulverización	3BHS2#####
Check.	2010-01-12 RePao	ABB: A-20##### system OEM: ___ sistema			=PU___
©ABBCH	2010-01-12 16:14				Page 280
Rev. 0	2010-01-12 RePao	Std Name: OEM Std Issue: Typ		Language: EN ES Form: A3	+PUCR <277 >