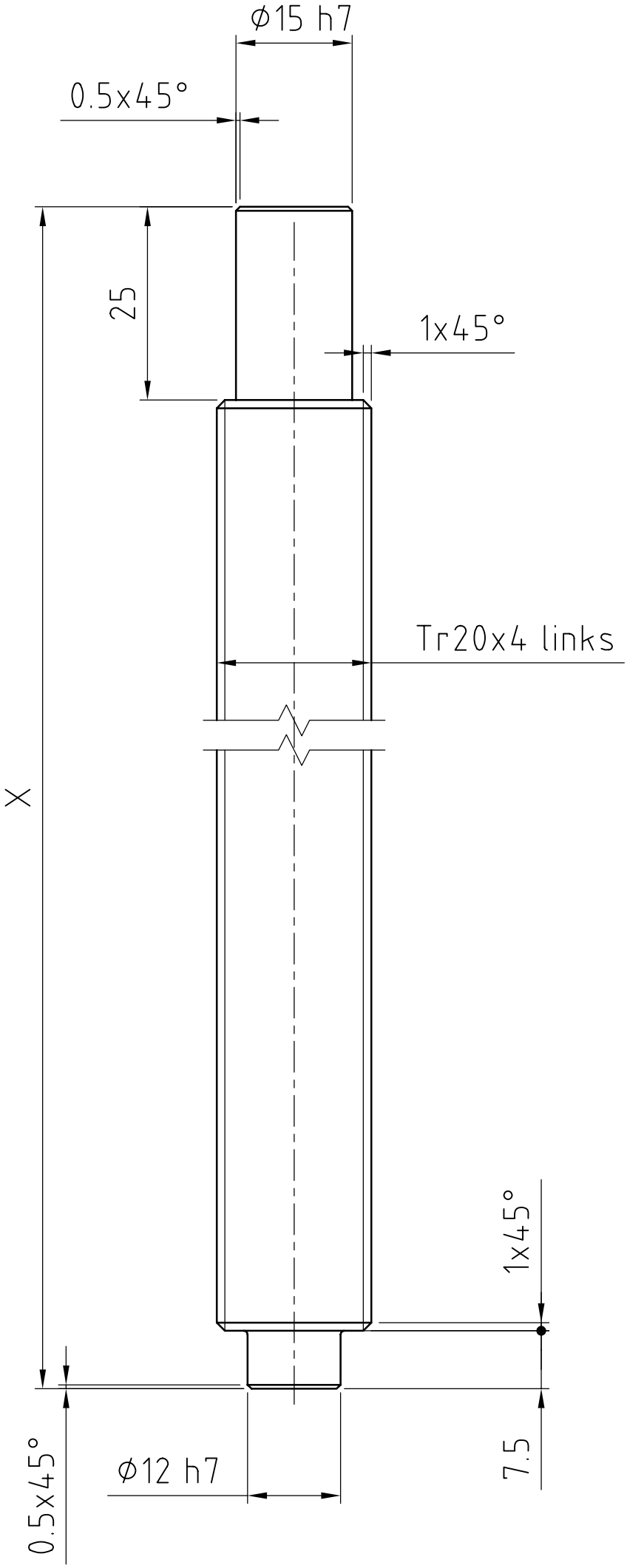
Ø15 h7
0.5x45°
25
1x45°
Tr20x4 links
X
1x45°
7.5
Ø12 h7
0.5x45°