A (1 : 1)

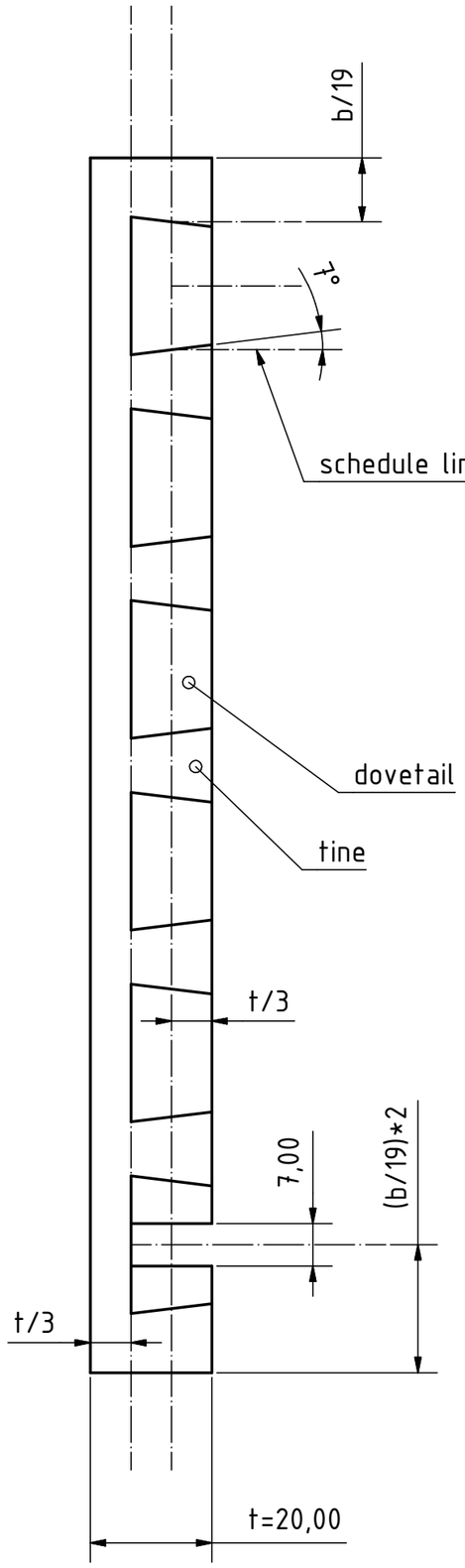

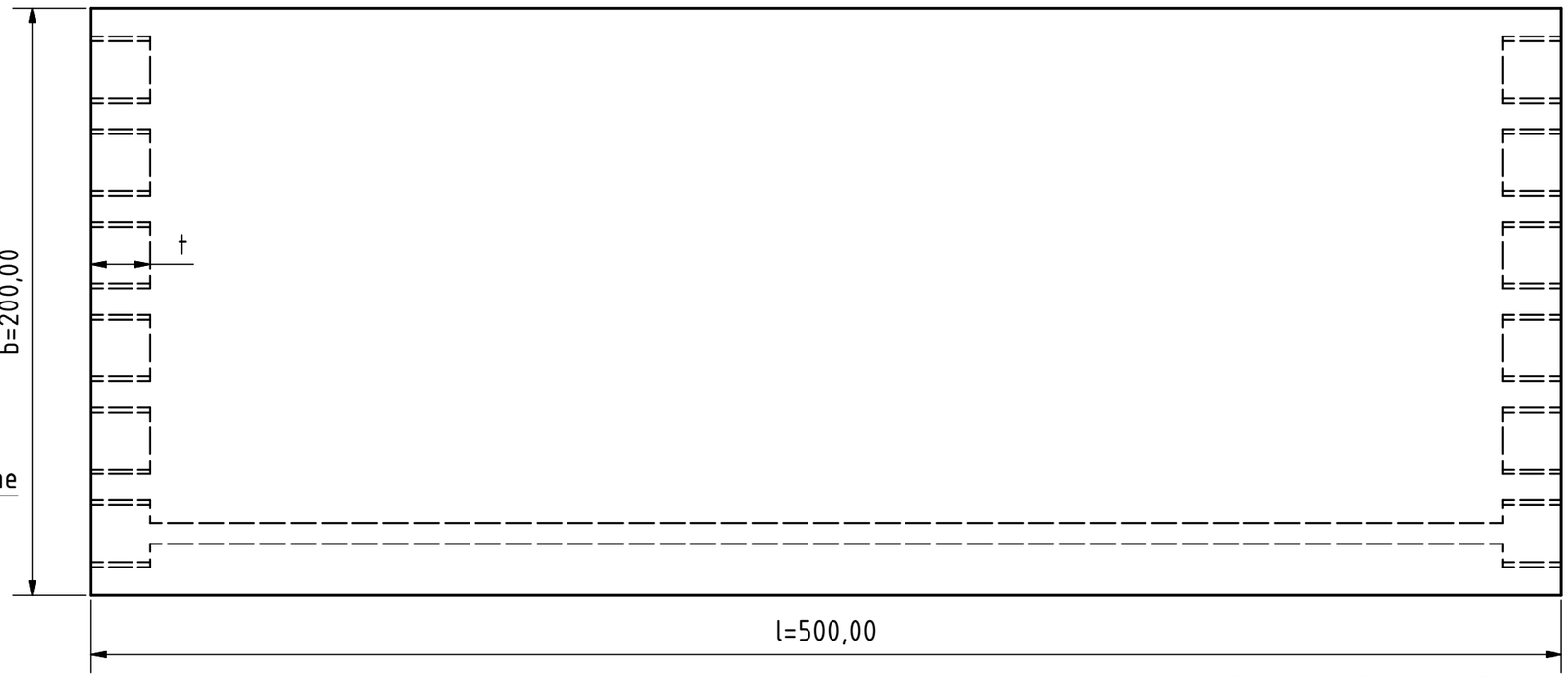

Volume: 1,890E+006 mm^3
(only part no. 1)

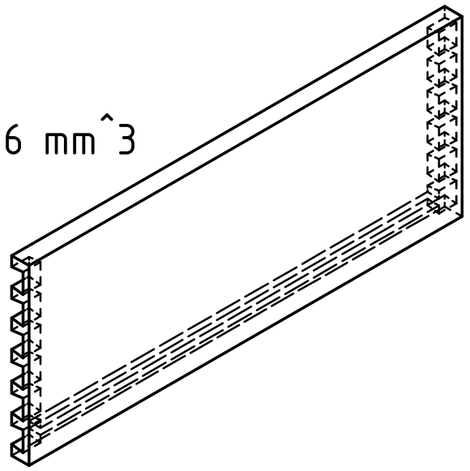

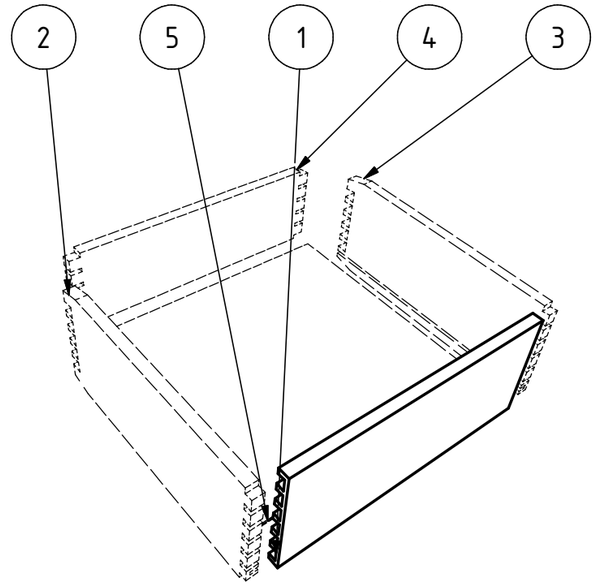

formula to make classical dovetailed drawer:
quantity of dovetails=> integer of b/(1,5*t)
quantity of tines=> quantity of dovetails +1

for the schedule lines: divide b/((quantity of dovetails*2)+quantity of tines)

partlist

object	quant.	name
1	1	front panel
2	1	side plate left
3	1	side plate right
4	1	back panel
5	1	baseplate

					Datum	Name
				Gezeichnet	25.09.2005	B. Fetzer
				Kontrolliert		
				Norm		
Status	Änderungen	Datum	Name			

front panel of a classical drawer
material: oak

1
A3