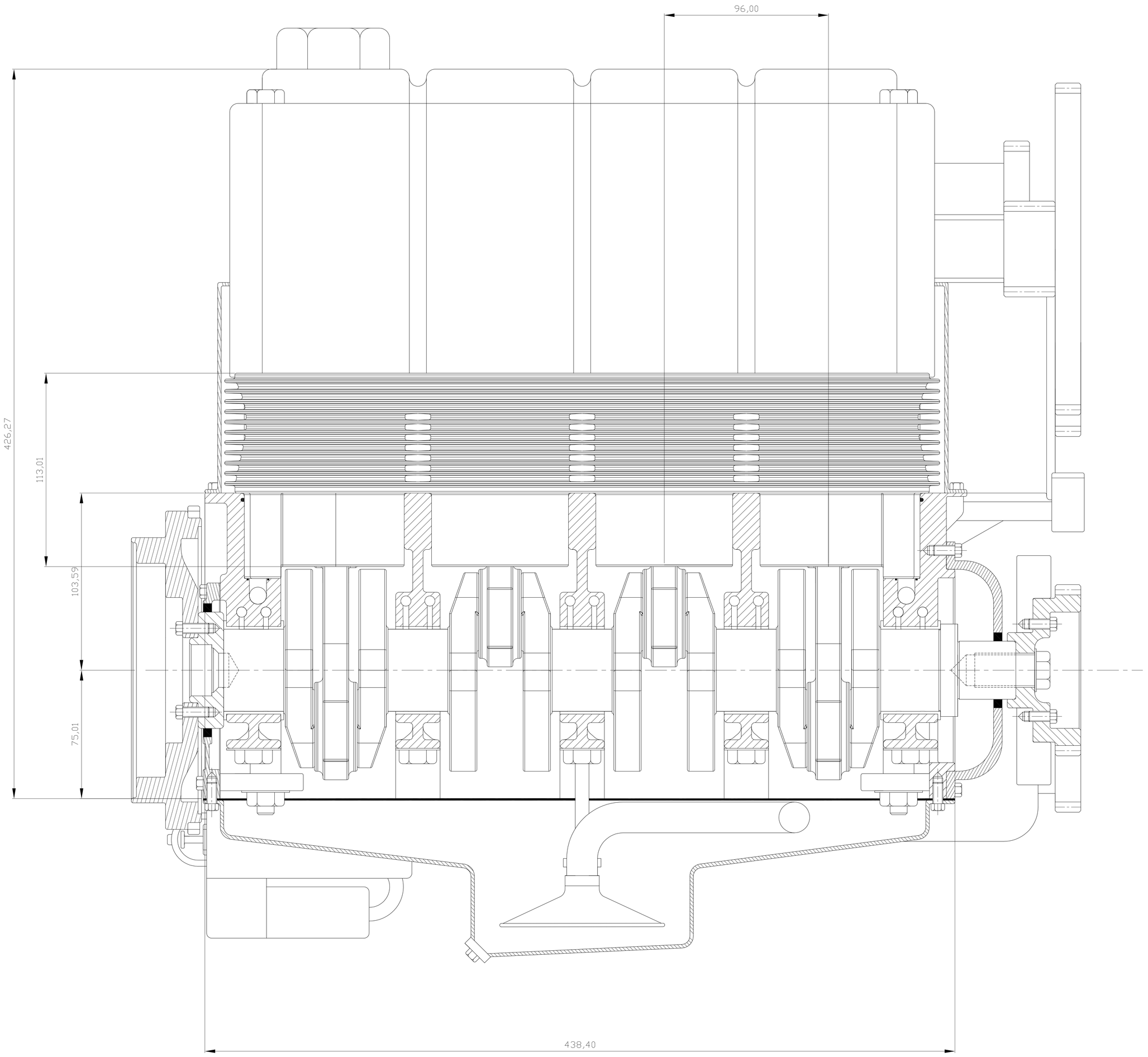

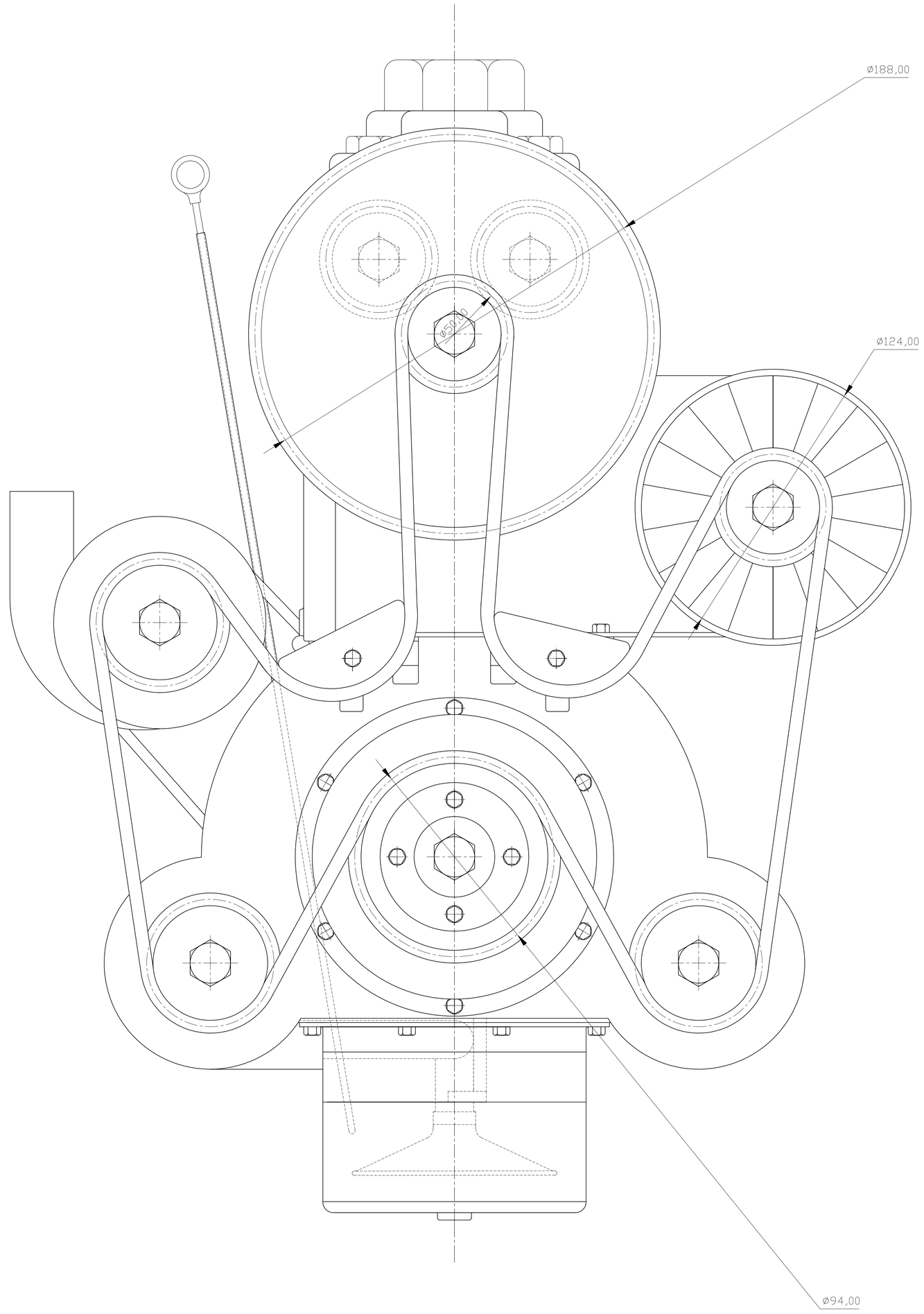

UNLESS OTHERWISE SPECIFIED: DIMENSIONS ARE IN MILLIMETERS SURFACE FINISH TOLERANCES: LINEAR ANGULAR	FINISH			DEBUR AND BREAK SHARP EDGES	REVISION
	NAME	SIGNATURE	DATE	TITLE:	Konstruktive Übung Nr. 910: Luftgekühlter Otto Motor mit mechanischer Aufladung
DRAWN					
CHK'D					
APPV'D					
MFG					
Q.A				MATERIAL:	DWG NO. A0
				WEIGHT:	SCALE:1:1 SHEET 1 OF 1