Location	NPS	Class	Hole	F1
D	1"	3000	1.875"	1/4"

Nozzle	NPS	Class	Leg1	SB	Leg42
B & C	4"	150	1/4"	1/4"	1/4"

Location	NPS	Class	OD	Leg41 - Weld Size	tp
E&F	2"	150	6"	3/8"	1.5"

Location	t	NPS	nt	Leg41 - Weld Size
B	0.5"	4"	0.531"	3/8"
C	0.675"	4"	0.531"	3/8"

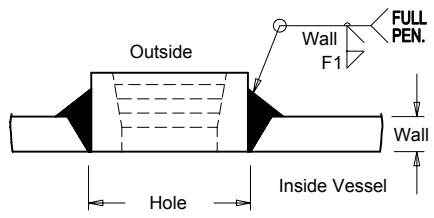

UW-16.1 Z-1 Coupling (modified)

WPS_____

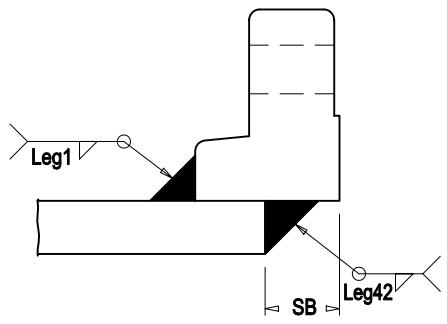

Slip On Flange

WPS_____

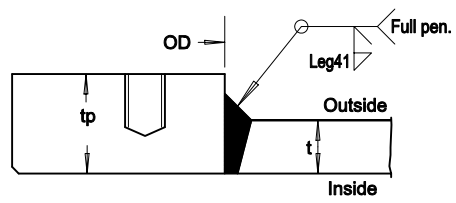

UG-40 (a-2)

WPS_____

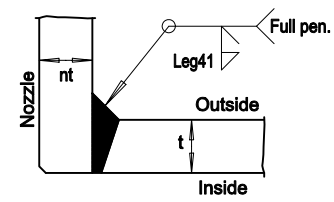

UW-16.1 (c)

WPS_____

Location	t	nt	Proj	Leg41 - Weld Size	Leg4
G	0.5"	0.75"	7/8"	3/8"	3/8"
A	0.675"	0.75"	0.5"	3/8"	3/8"

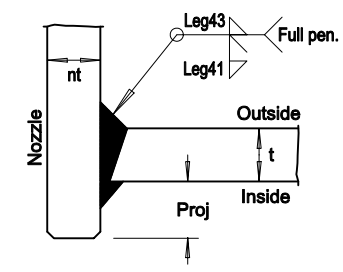

UW-16.1 (c) with inside projection

WPS_____

Details of Lifting Lugs

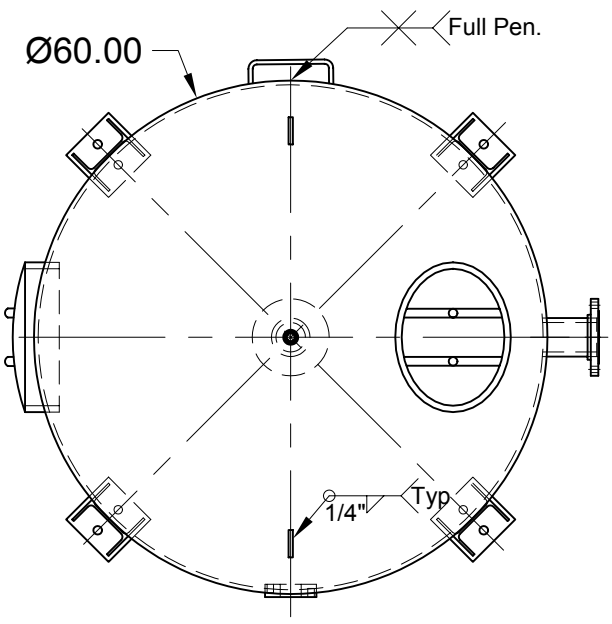

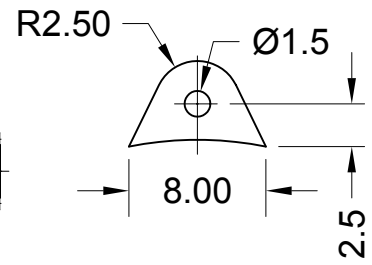

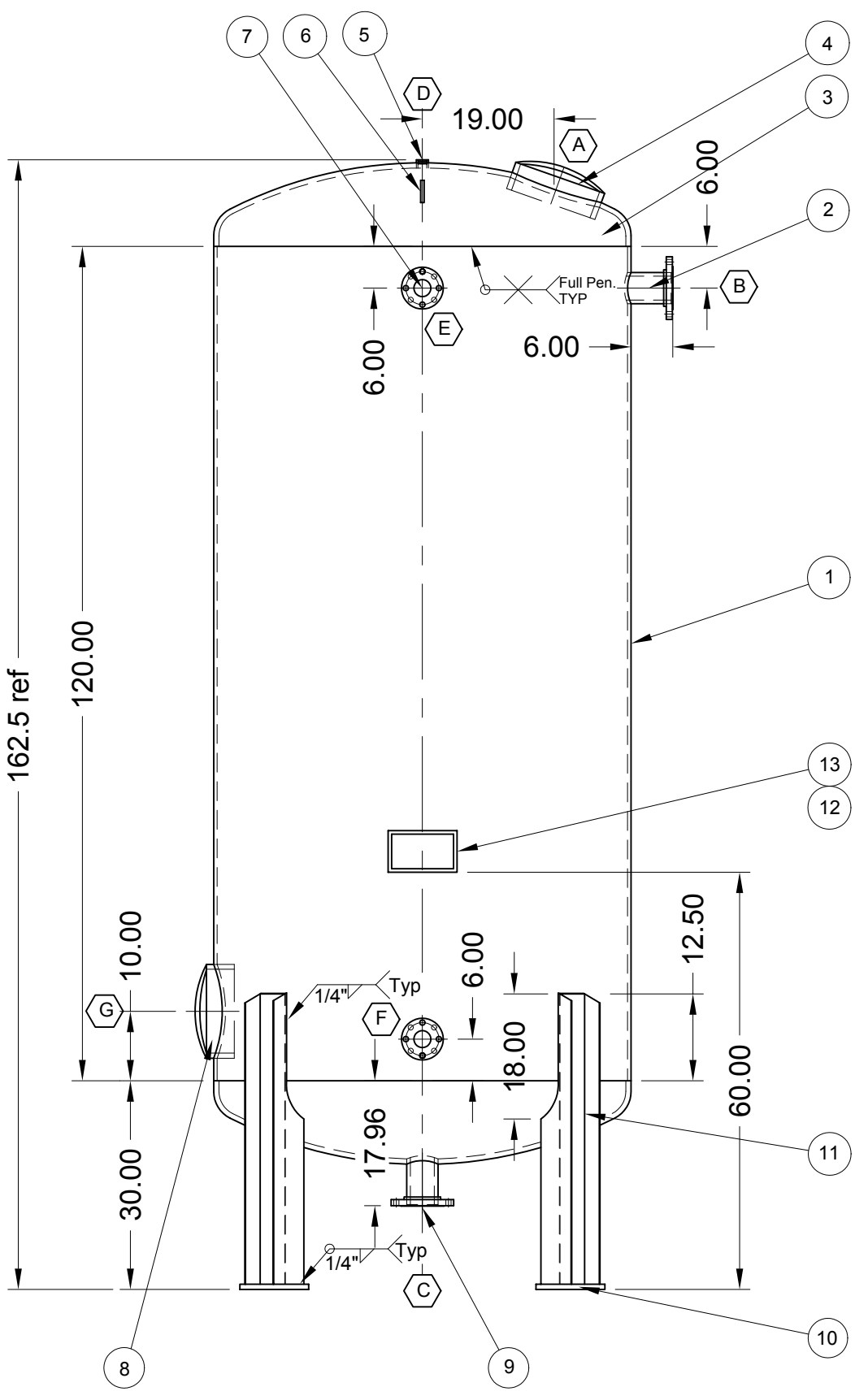

Design Code And Conditions:

Code: ASME VIII-1 Edition: 2001 Addenda: None
Radiography: None
Impact Test: Not Required Per UG-20(f)
Interior Finish: None
Exterior Finish: Primer
Volume: 213 cuft Fluid: Water
Weight: Dry 5360 lbs In Service 18650 lbs At Pressure Test 18650lb
MAWP: 150 psi At: 120 °F Maximum Allowable Working Pressur
MDMT: 120/-20 °F At: 150 psi Maximum Design Metal Temperature
Test Pressure: 195 psi With: Water For: 30 min. Minimum
Corrosion Allowance: 0.125 Inch

General Notes:

Construction:

All welds shall be neat in appearance, free of slag and other defects
Vessel shall be cleaned of scale, oil, weld spatter and all other foreign matter before hydrostatic testing
Remove all sharp edges on nozzles - 1/8" radius minimum
Long Seam - Mag particle inspect after joggling to UW-13(b)(4)(b)

Tolerance:
Permissable out of roundness of cylindrical and conical shells shall not exceed 1% of the nominal diameter. This tolerance shall be increased to 2% when the cross-section passes through or within 1 ID of a fitting.
Maximum misalignment of butt joints is limited to: Category A,B,C or D up to 1/2" thick - 1/4*t

Head to shell weld is Category B

Conditions:

This vessel will be bolted to the floor
All nozzles are to support nominal loads only

Flange And Dished Head:

60" OD x 3/4" thick nominal
Minimum 0.675" thick after forming
60" Dished Radius With 3.6" Inside knuckle Radius
1.5" straight flange
Stress releive heads

Clark Kennedy Co. Manway CRN# 0H7379.5C

Item	Qty	Description	Material
13	1	Nameplate	ss
12	1	Nameplate Bracket	cs
11	4	Legs W6x15	cs 44W
10	4	Pads-7x7x3/4"	cs 44W
9	2	4" Class 150 RFSO Flange	SA-105
8	1	Manway 12x16" With 4x3/4" Ring M3	SA-106 B
7	2	2" Class 150 Double Sided Flange Pads	SA-240 316
6	2	Lifting Lugs 1/2" Thick	SA-516 70
5	1	1" Class 3000 Half Coupling	SA-105
4	1	Manway 12x16" With 3x3/4" Ring M3	SA-106 B
3	2	F & D Heads-see notes	SA-516 70
2	2	4" SCH 160 Pipes	SA-106 B
1	1	0.5" Thick Rolled Plate Shell	SA-516 70

Bill of Materials

Mark	Service	Description	Location
G	Access	Manway 12x16" NPT	Shell
E & F	Process	2" 150# NPT	Shell
D	Vent	1" NPT	Top Head
C	Outlet	4" Class 150 NPT Flange	Bottom Head
B	Inlet	4" Class 150 NPT Flange	Shell
A	Access	Manway 12x16" NPT	Top Head

Service Connections

Revision	Date	Description
R0	03/06/2002/LB/CL	For Construction

Pressure Vessel Engineering Ltd. www.pveng.com
599 Glen Forrest Blvd. Waterloo, Ontario, N2L 4J7 (519) 880-9808
Pressure Vessel Design, Drafting, Code Calculation

XYZ Vessel Inc.
123 Anytown
Ontario, Canada
H0H 0H0

Sample Vessel 4

WPS _____ Heads, Shell and Legs