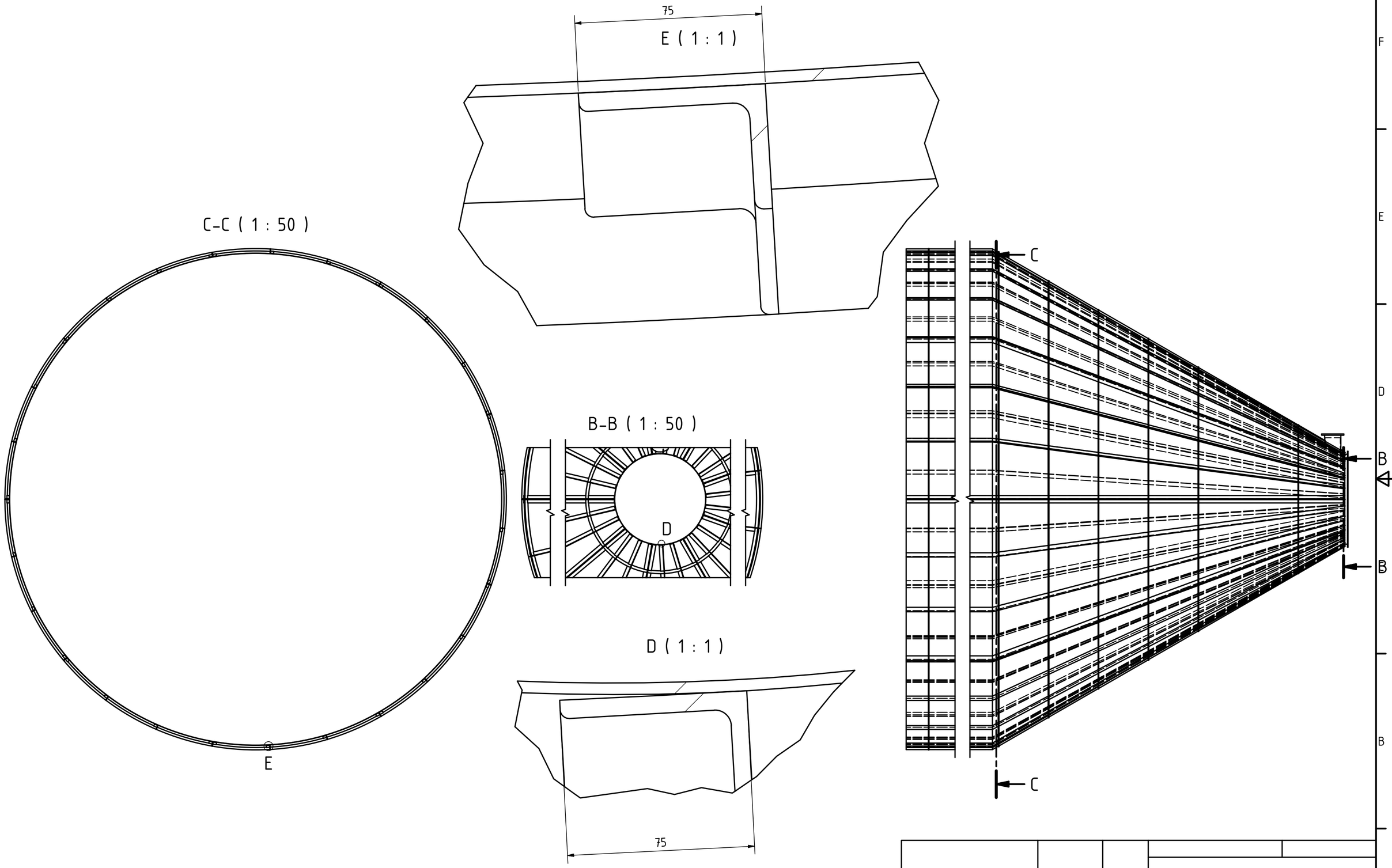

					Date	Name
				Drawn	05.11.2011	Y. Neumann
				Checked		
				Standard		
State	Changes	Date	Name			

2015-Kegel-Verrippung-Winkel-b

1

A2