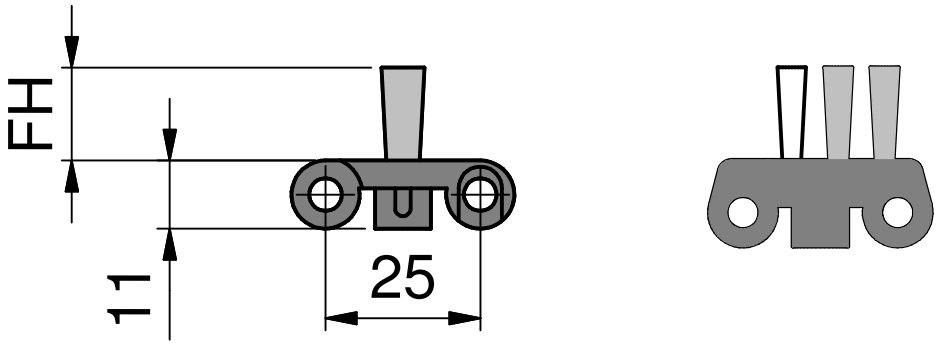
FH
11
25